Windload Chart for 9816/9817 Meeting Rail

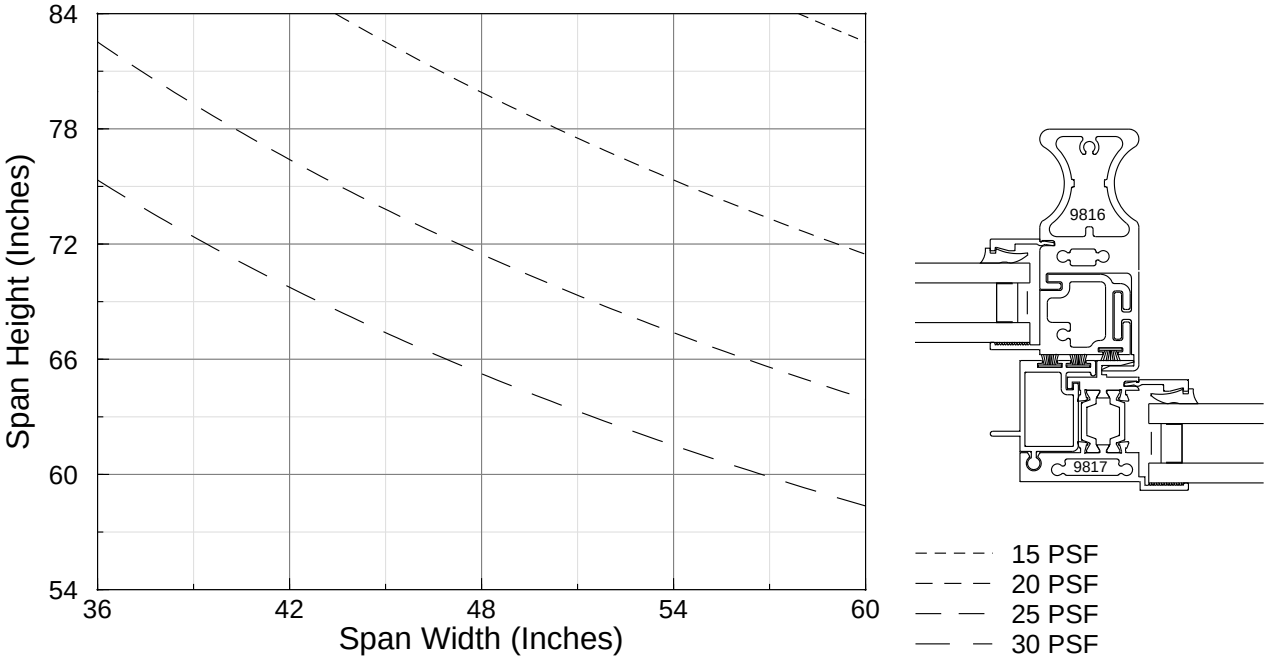

Windload Chart for #9870/7190/9870 I Beam Mullion

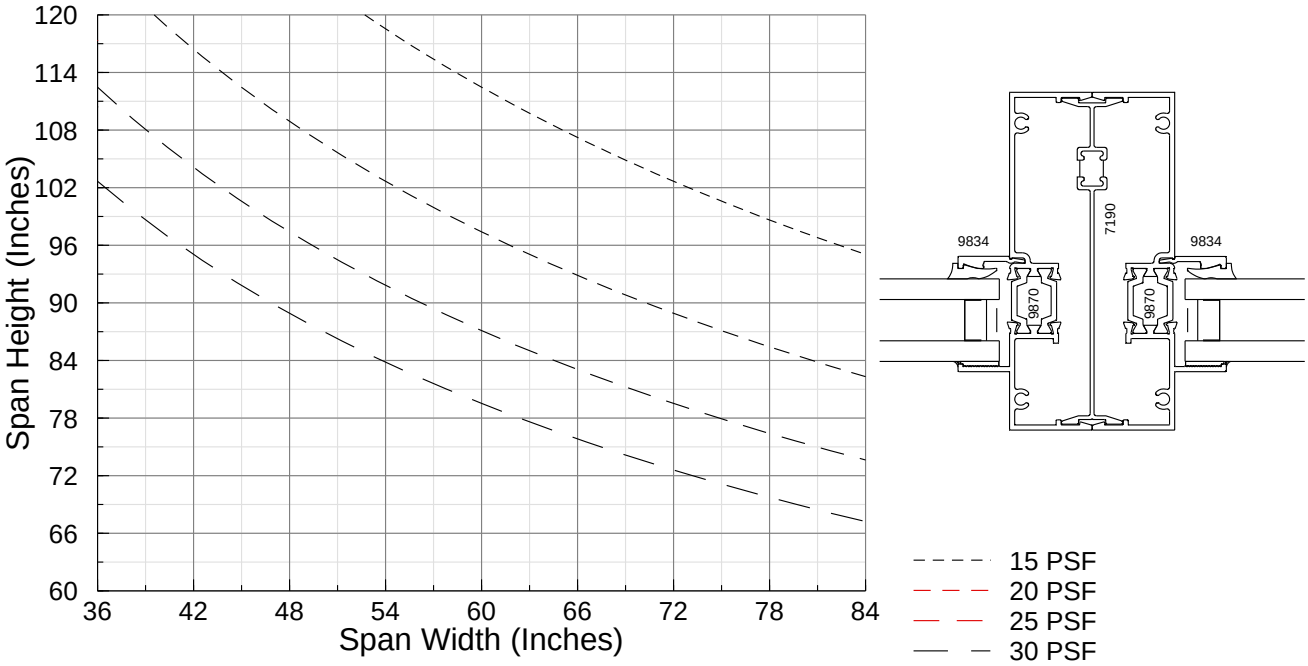

All Calculations Based on L/175 Deflection

MANKO
WINDOW SYSTEMS, INC.

PHONE 785/776-9643 800/642-1488 FAX 785/776-9644
800 HAYES DRIVE MANHATTAN, KS 66502

Windload Chart for 9870/568 3 Piece Mullion

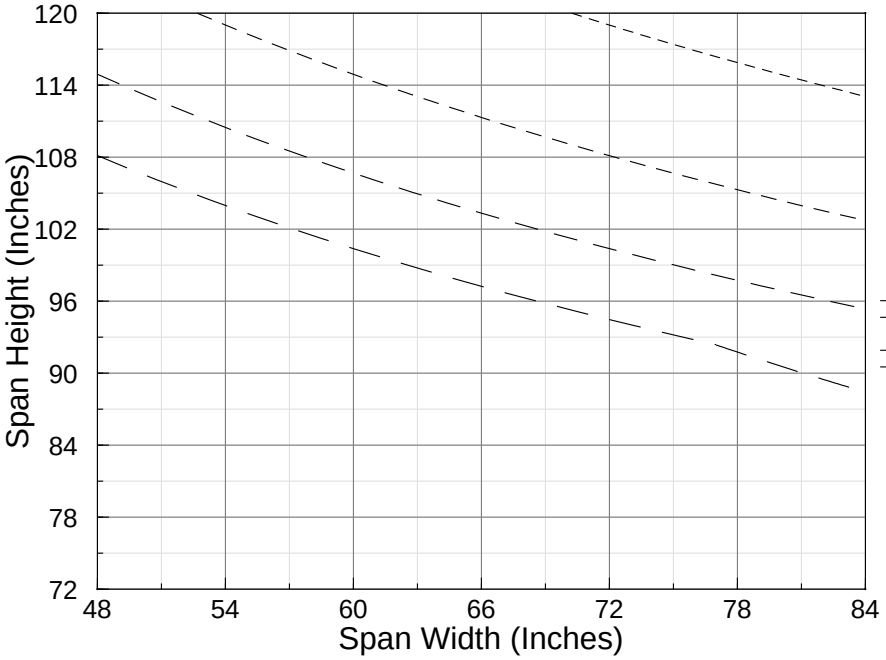

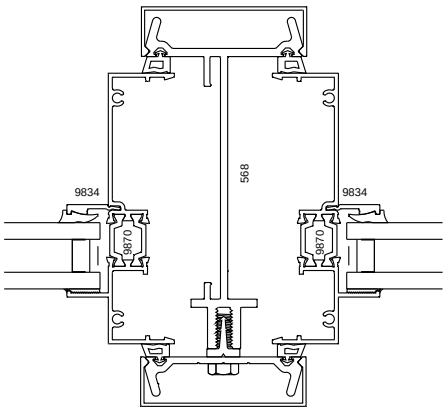

15 PSF
20 PSF
25 PSF
30 PSF

All Calcula

MANKO
WINDOW SYSTEMS, INC.
PHONE 785/776-9643 800/642-1488 FAX 785/776-9644
800 HAYES DRIVE MANHATTAN, KS 66502