5500 Series
4 1/16” Heavy Commercial Single & Double Hung Window

MANKO WINDOW SYSTEMS, INC.
800 HAYES DRIVE
MANHATTAN, KANSAS 66502
PHONE: (800) 642-1488 (785) 776-9643
FAX: (800) 576-2656 (785) 776-9644

MANKO WINDOW SYSTEMS, INC.
11000 EAST 51ST AVE. SUITE B
DENVER, COLORADO 80239
PHONE: (888) 642-1488 (303) 375-0642
FAX: (888) 576-2656 (303) 375-0669

TABLE OF CONTENTS

- BLOCK & TACKLE SH ELEVATIONS 1-2
- ULTRA-LIFT SH ELEVATIONS 3
- TRANSOM ELEVATION 4
- SIDELITE ELEVATION 5
- BLOCK & TACKLE DH ELEVATIONS 6
- ULTRA-LIFT DH ELEVATION 7
- SH APPLIED GRID OPTIONS 8-9
- TRUE-MUNTIN OPTION 10
- DH APPLIED GRID OPTIONS 11-13
- T-MULLIONS 14
- RECEPTORS 15
- HISTORICAL PANNING 16
- WIND LOAD CHARTS 17-19

5500 SINGLE HUNG

BLOCK & TACKLE

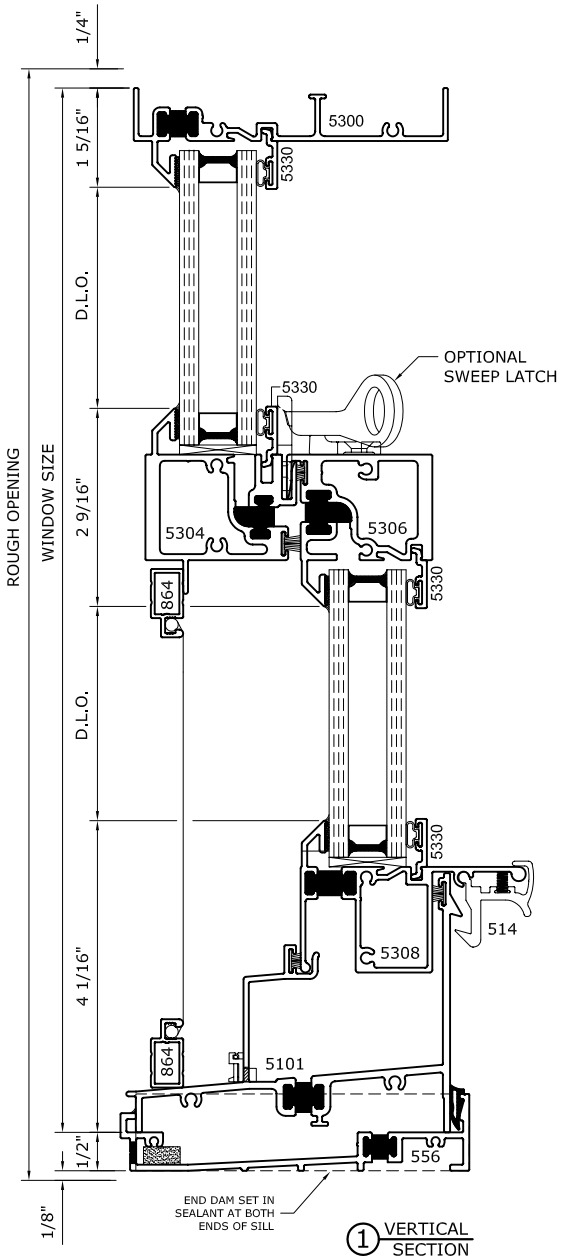

① VERTICAL SECTION

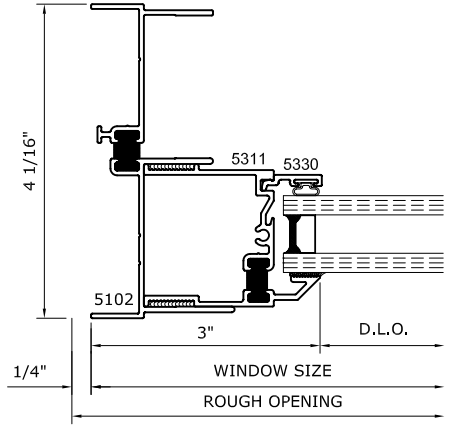

② JAMB

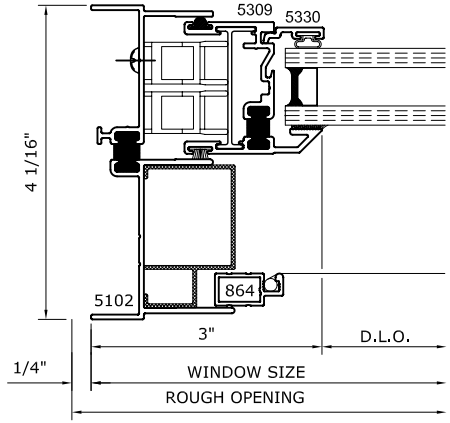

③ JAMB

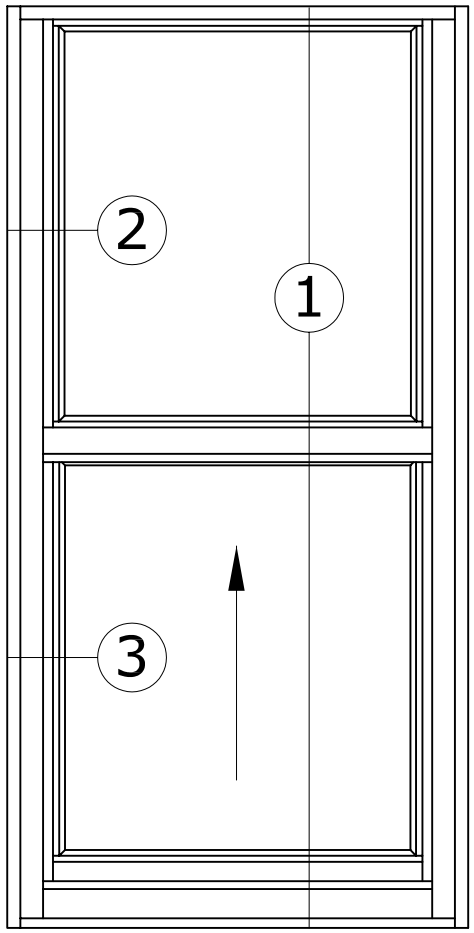

5500 SINGLE HUNG

BLOCK & TACKLE
OPTIONAL HISTORICAL HEAD

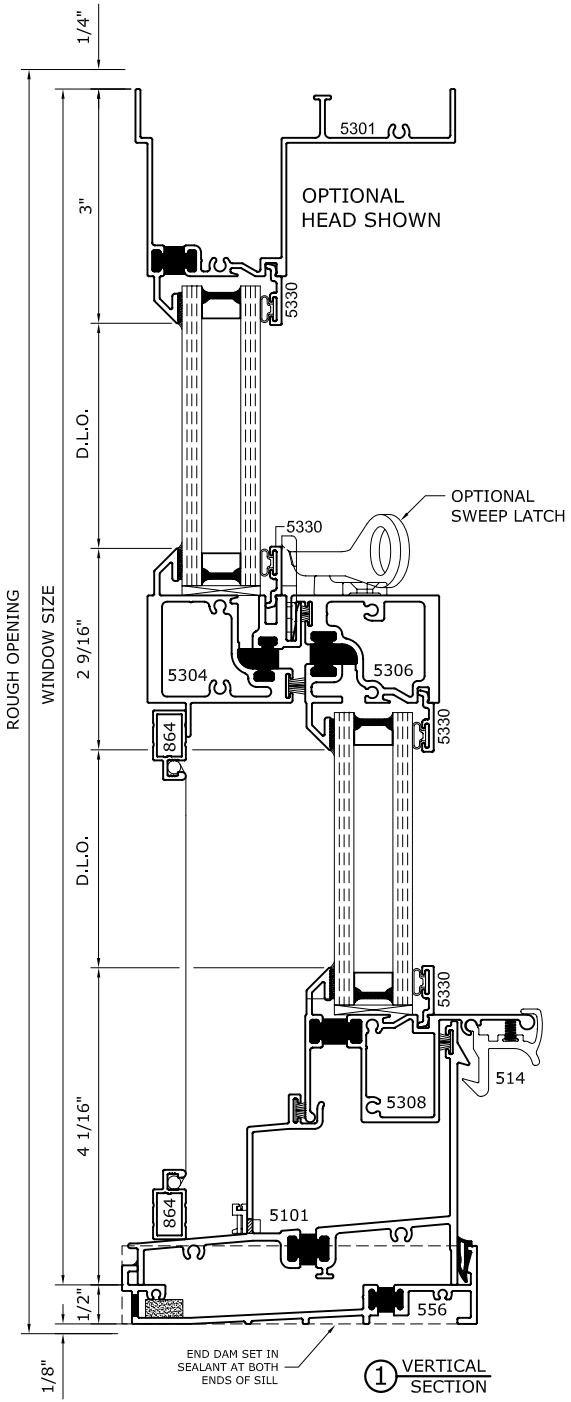

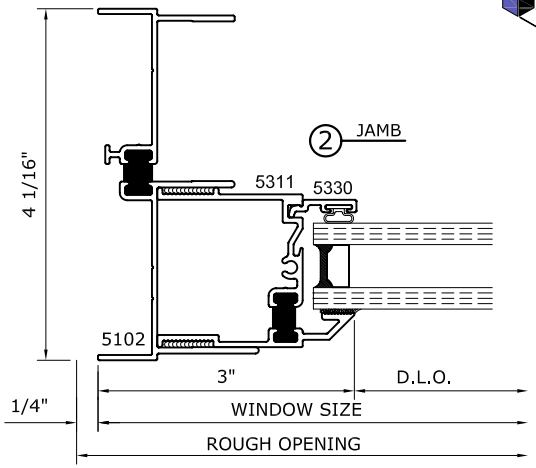

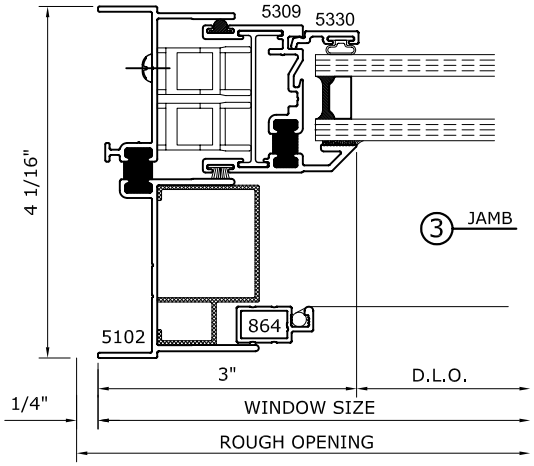

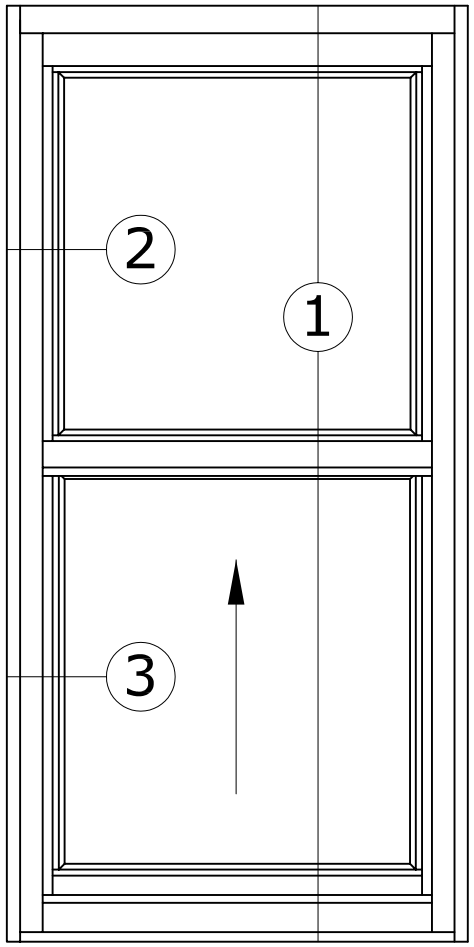

5500 SINGLE HUNG

SIDE LOAD ULTRA LIFT

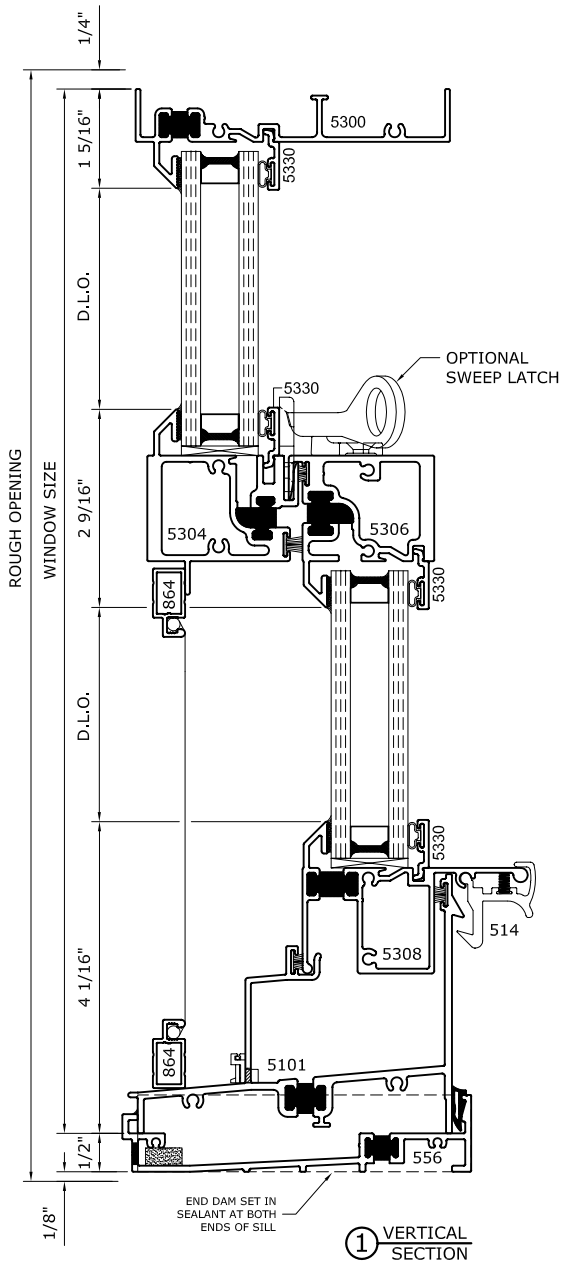

1 VERTICAL SECTION

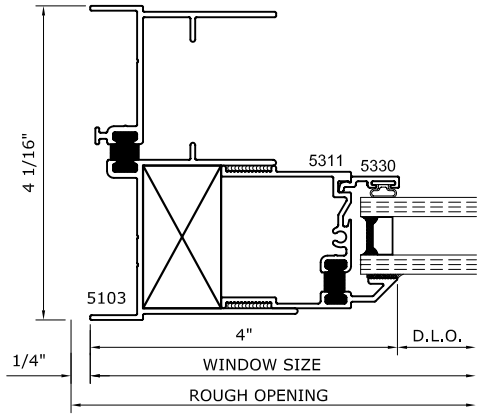

2 JAMB

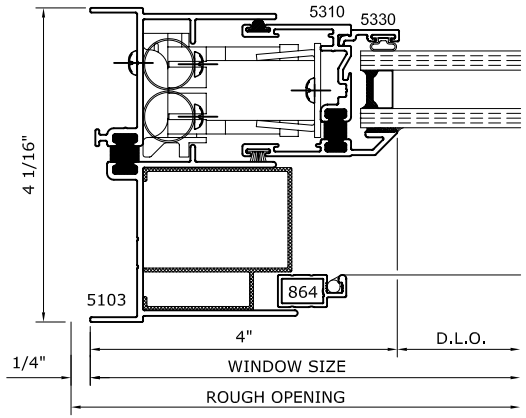

3 JAMB

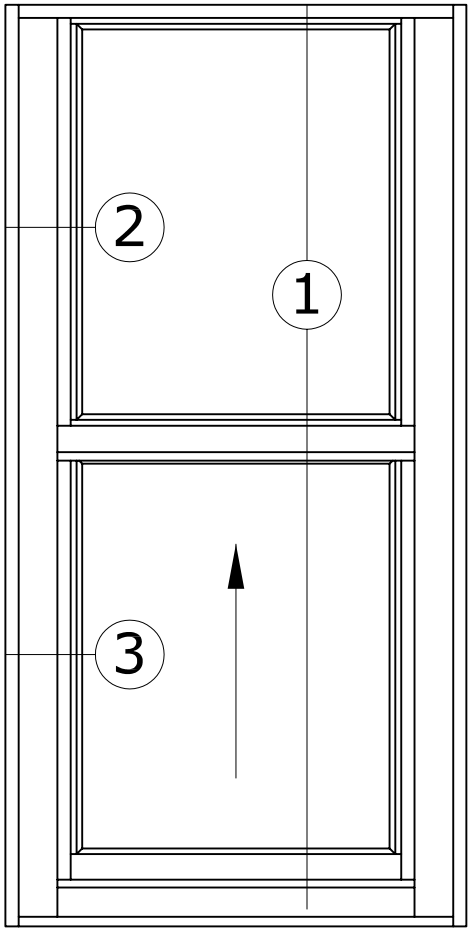

5500 SINGLE HUNG

ULTRA LIFT W/ TRANSOM

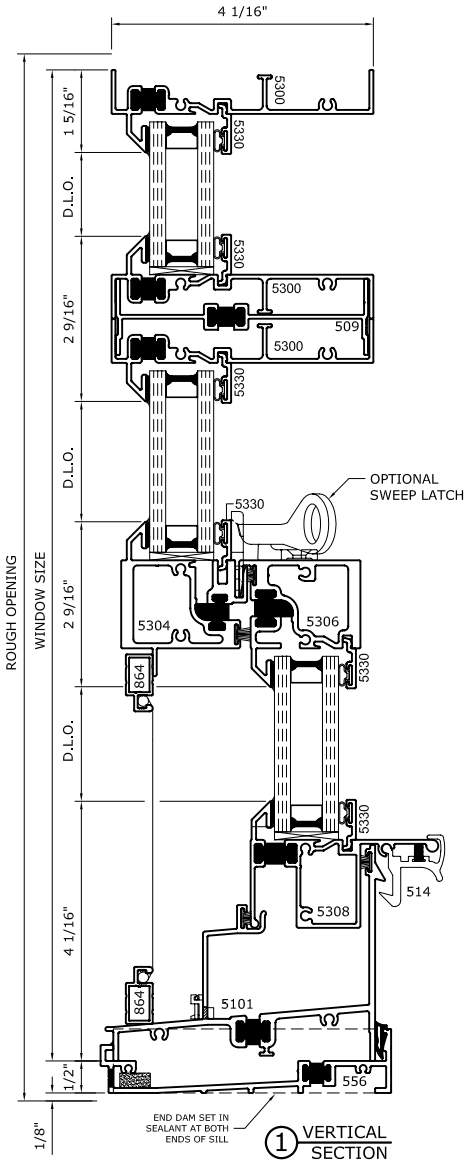

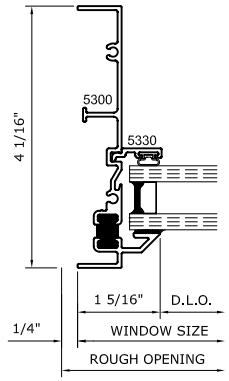

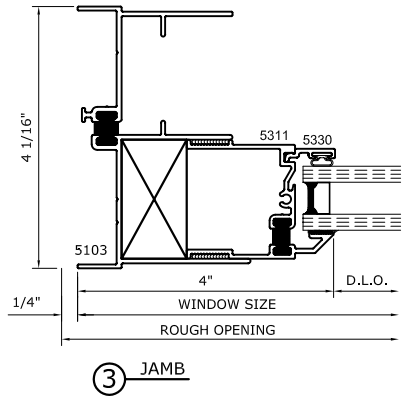

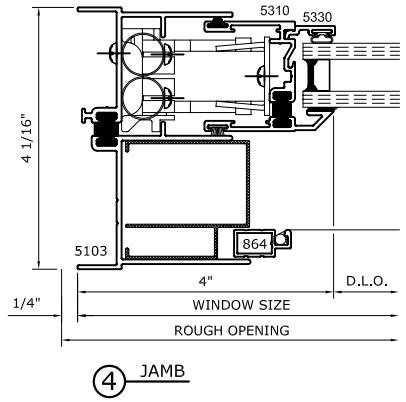

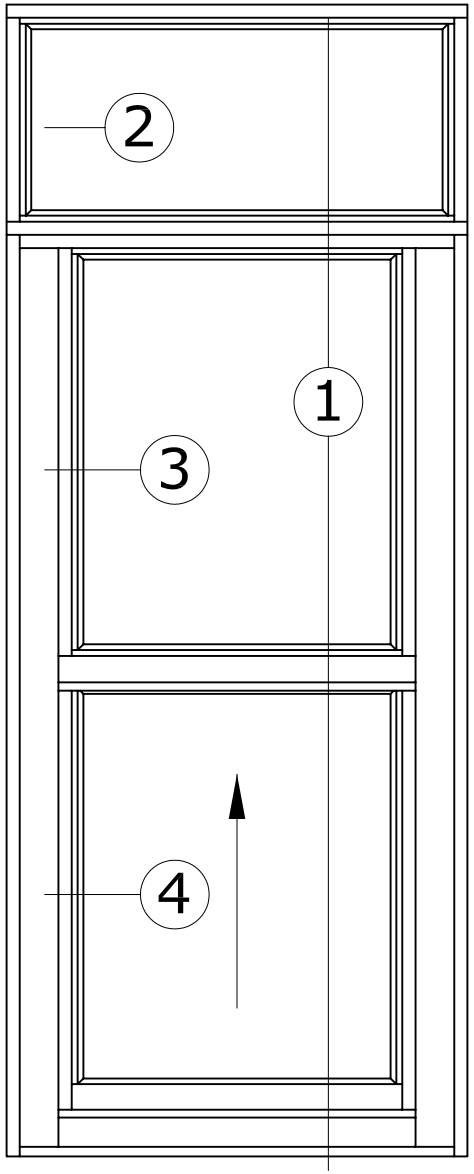

5500 SINGLE HUNG

BLOCK & TACKLE W/ SIDELITE

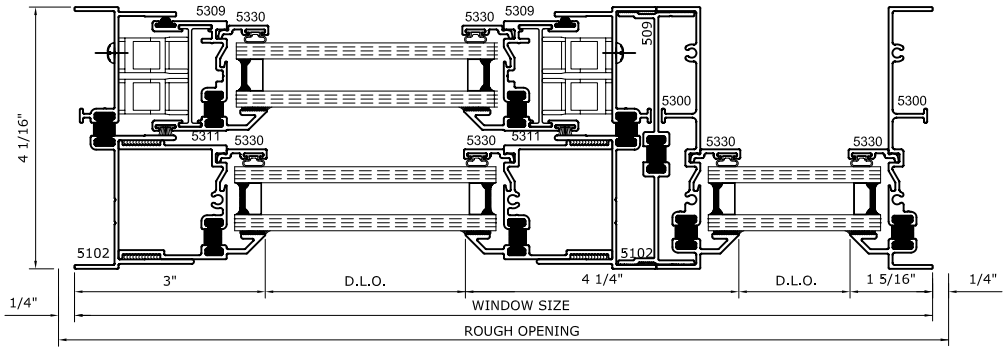

③ HORIZONTAL SECTION

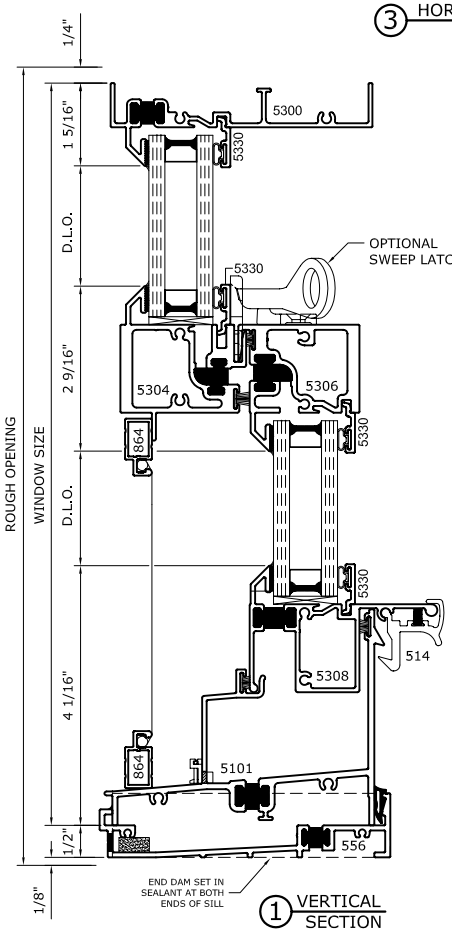

① VERTICAL SECTION

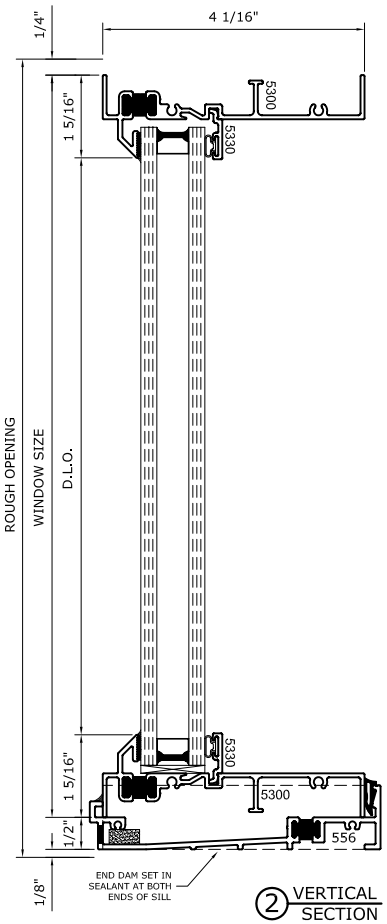

② VERTICAL SECTION

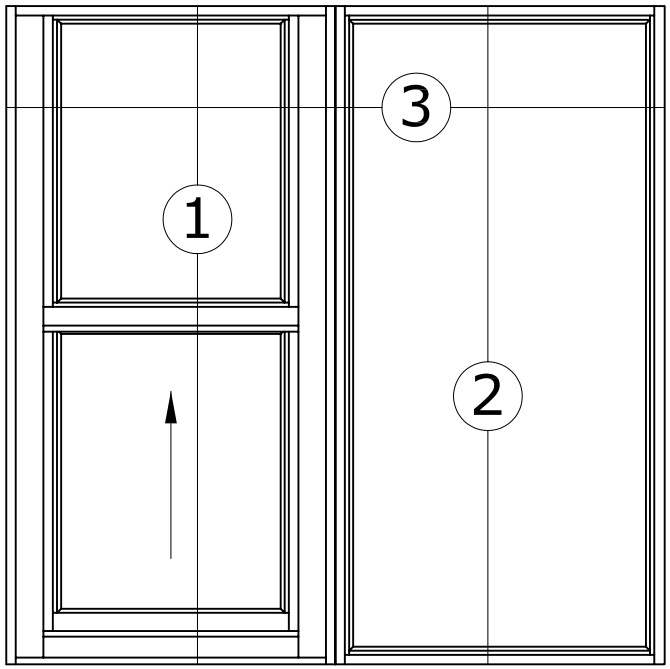

5500 DOUBLE HUNG

BLOCK & TACKLE

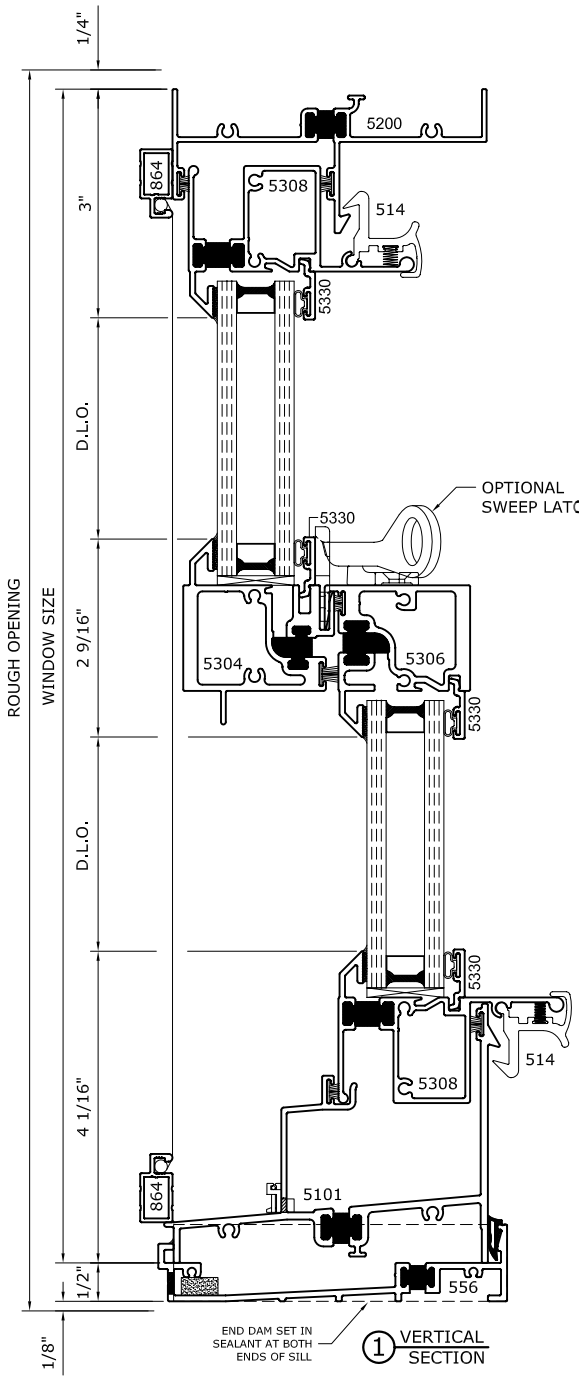

1 VERTICAL SECTION

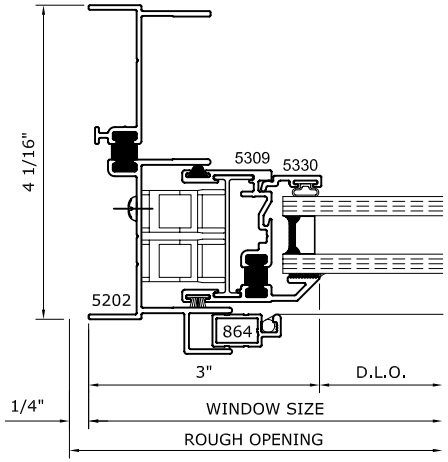

2 JAMB

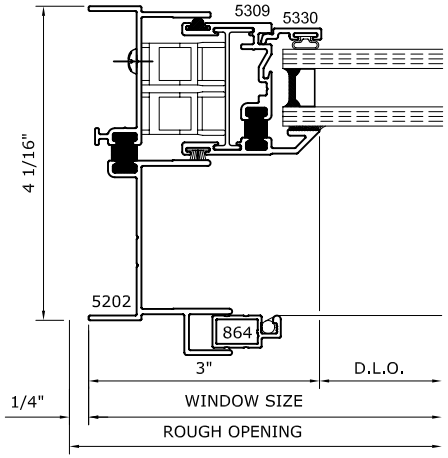

3 JAMB

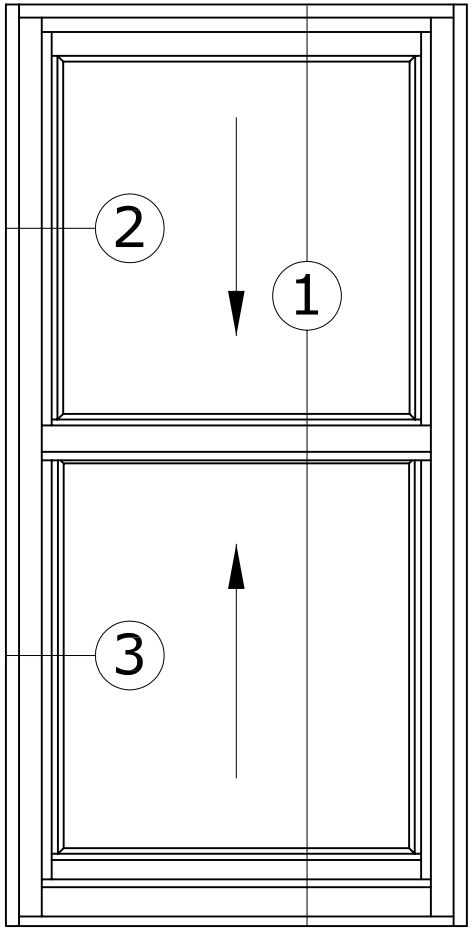

5500 DOUBLE HUNG

SIDE LOAD ULTRA LIFT

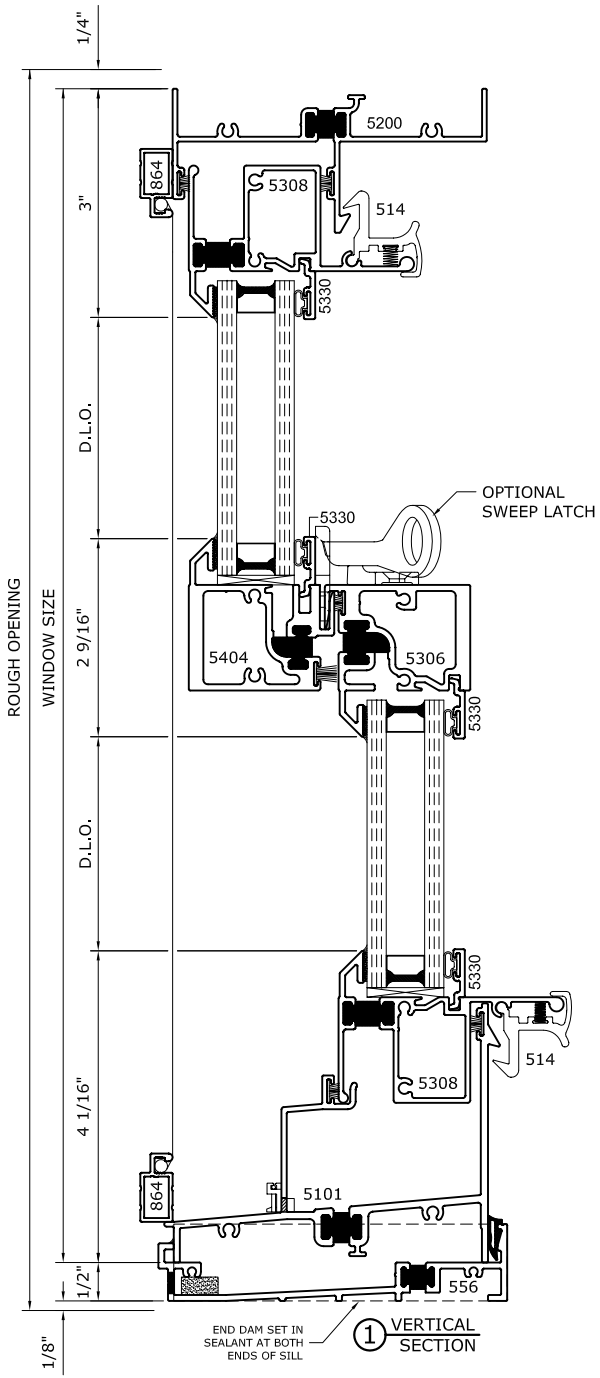

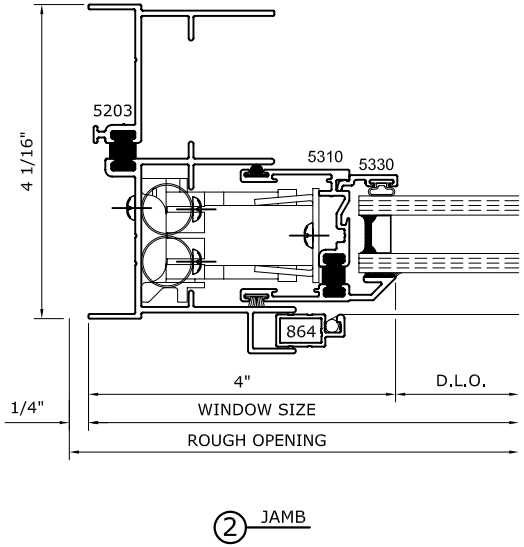

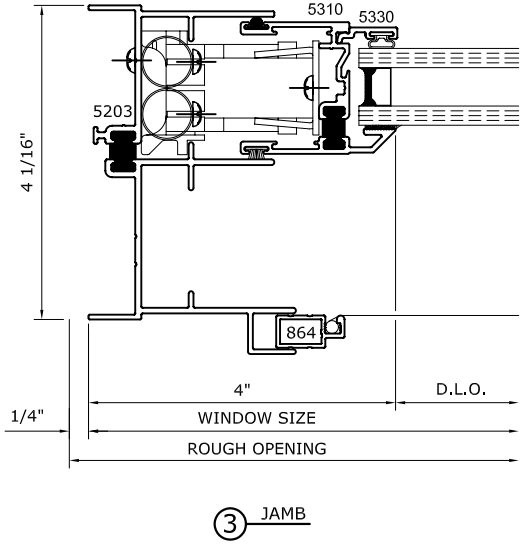

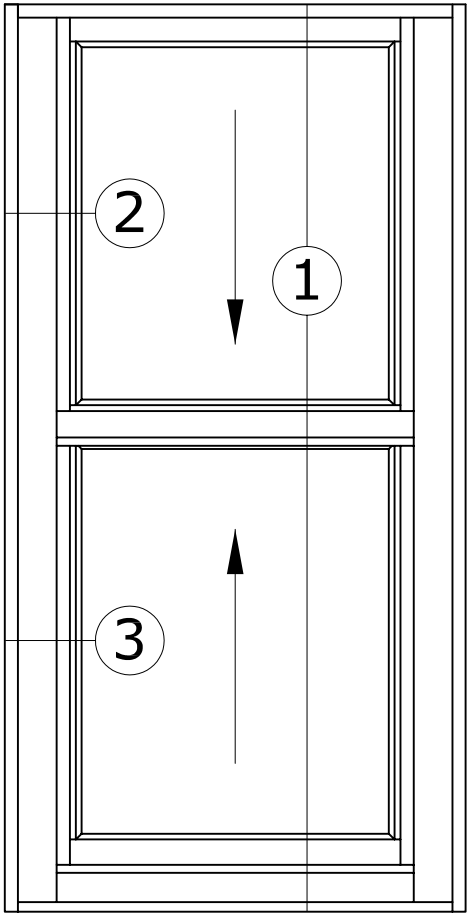

5500 SINGLE HUNG

BLOCK & TACKLE
APPLIED GRIDS
OPTIONAL HISTORICAL HEAD

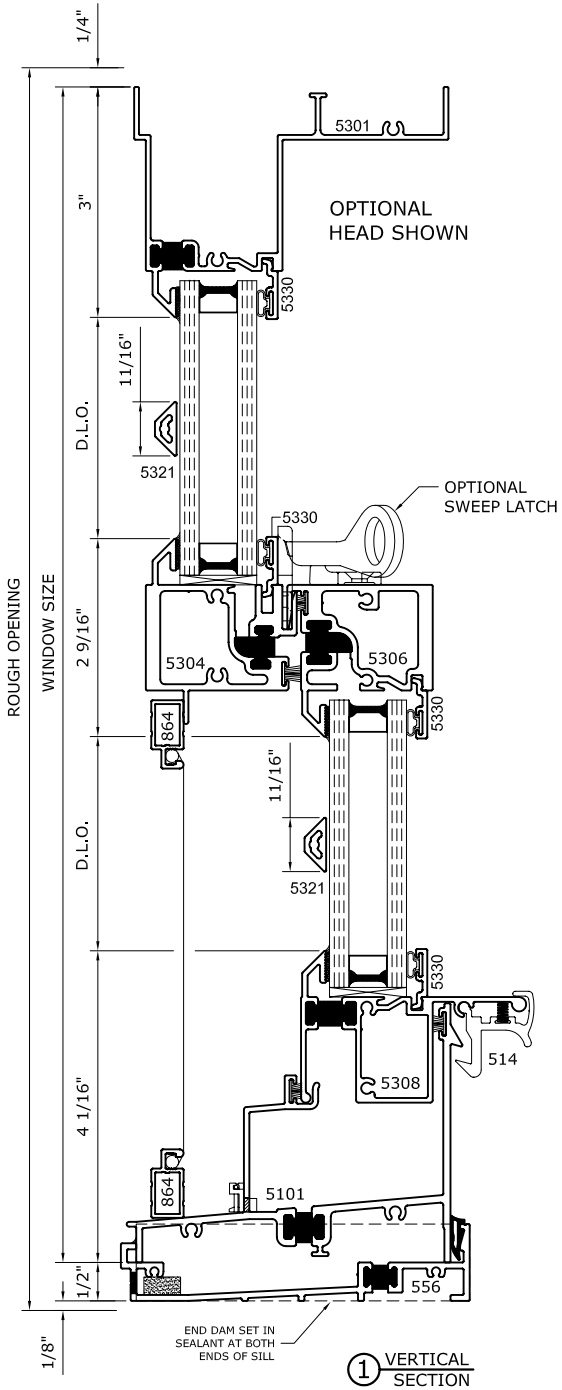

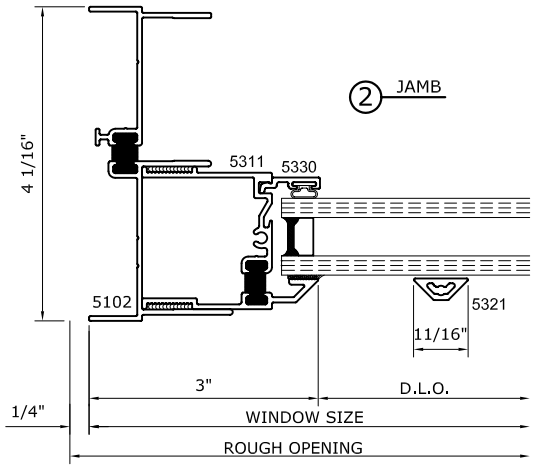

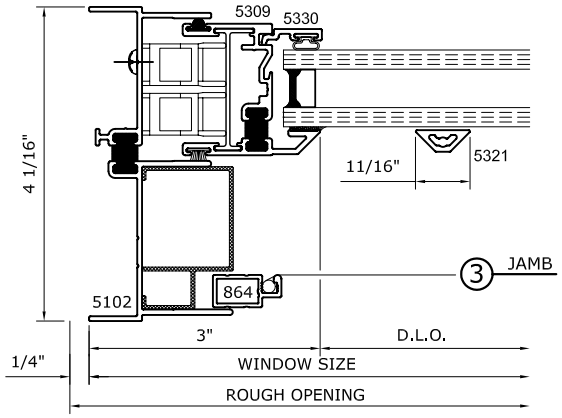

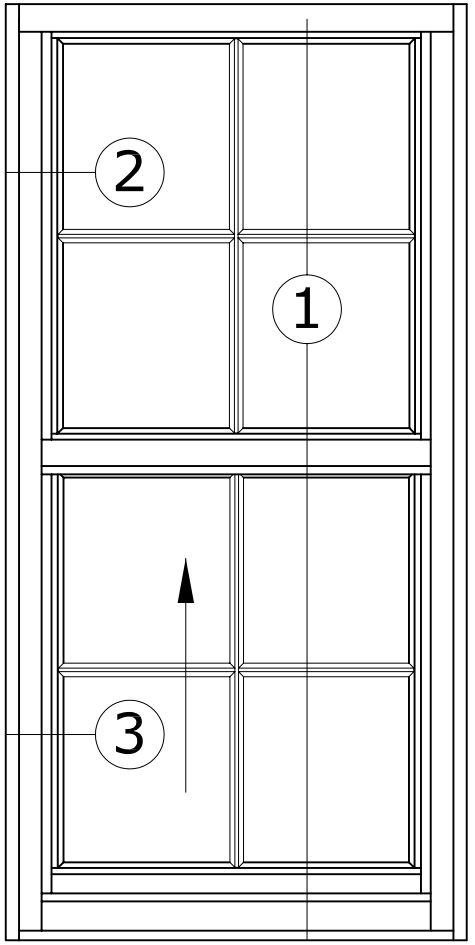

5500 SINGLE HUNG

ULTRA LIFT/APPLIED GRIDS
OPTIONAL HISTORICAL HEAD

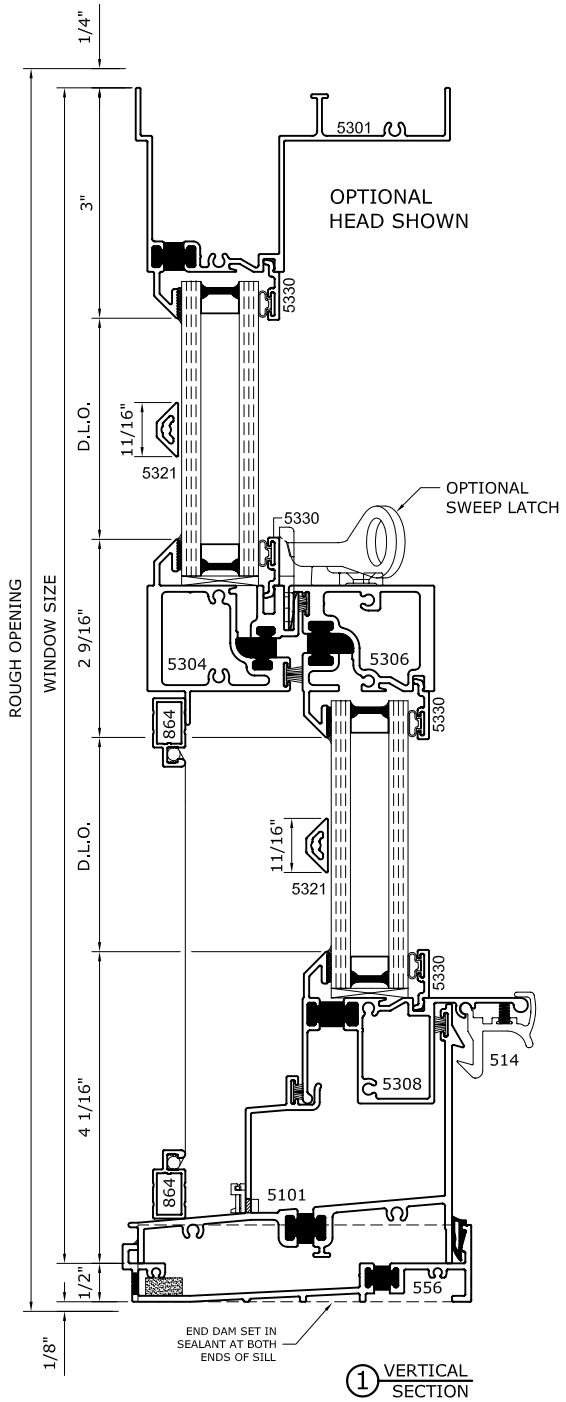

1 VERTICAL SECTION

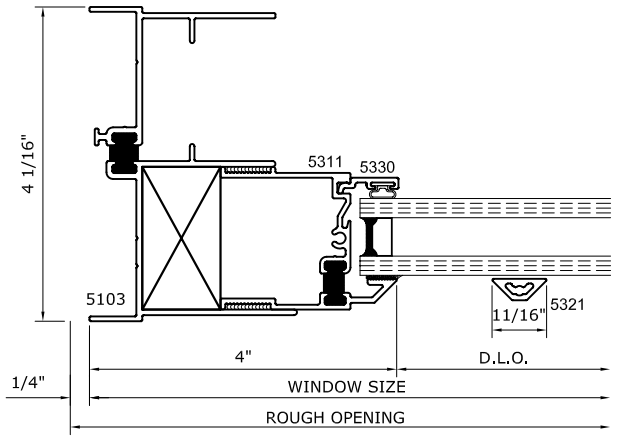

2 JAMB

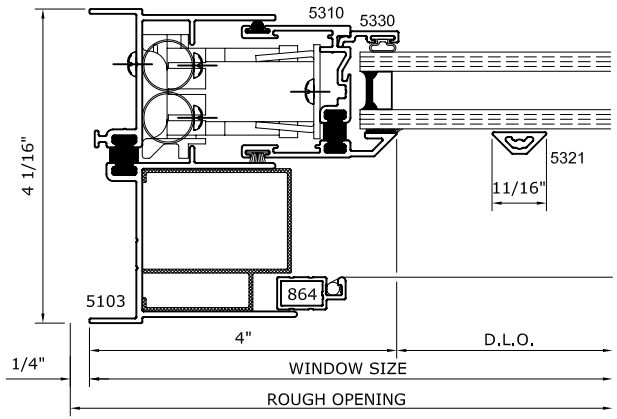

3 JAMB

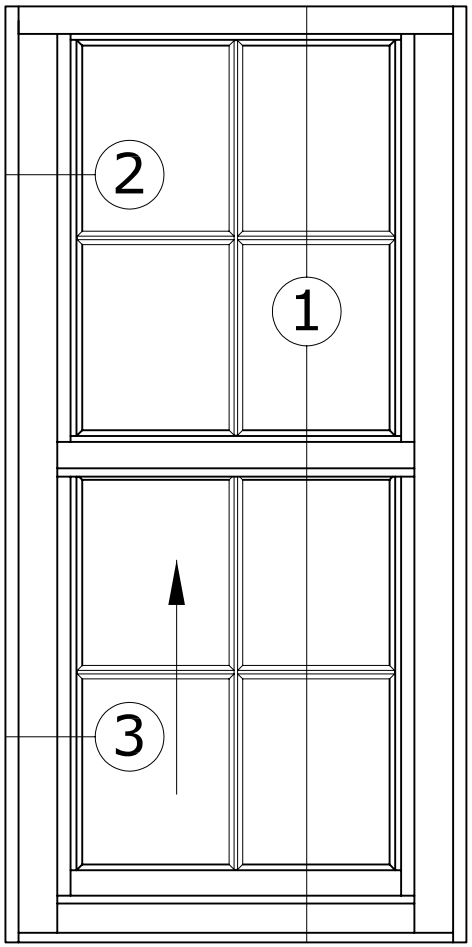

5500 SINGLE HUNG

ULTRA LIFT/TRUE MUNTIN
OPTIONAL HISTORIC HEAD

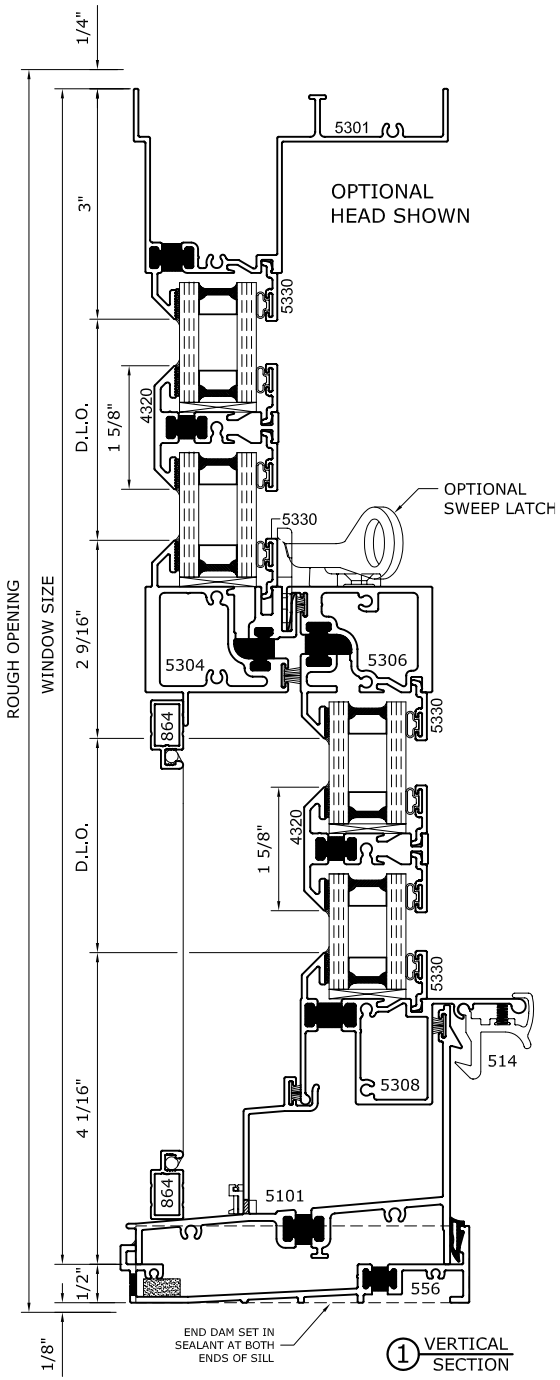

① VERTICAL SECTION

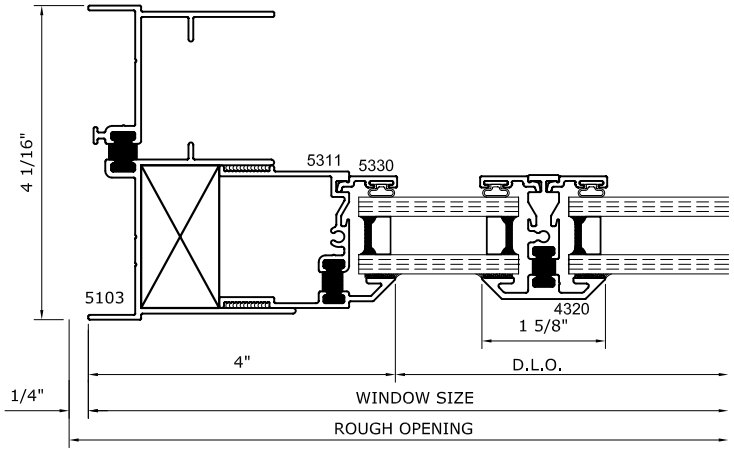

② JAMB

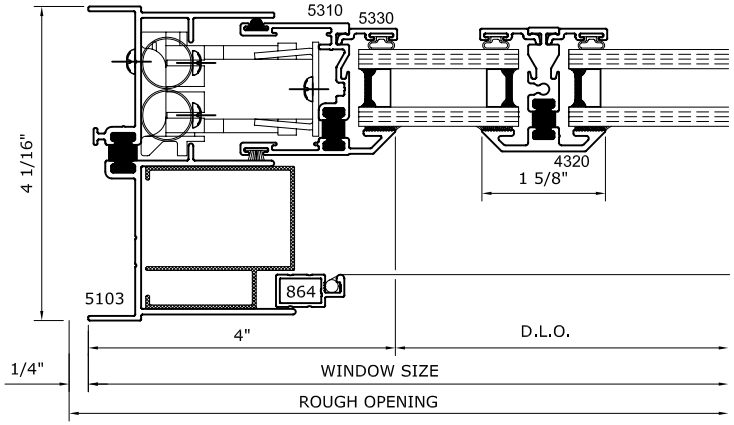

③ JAMB

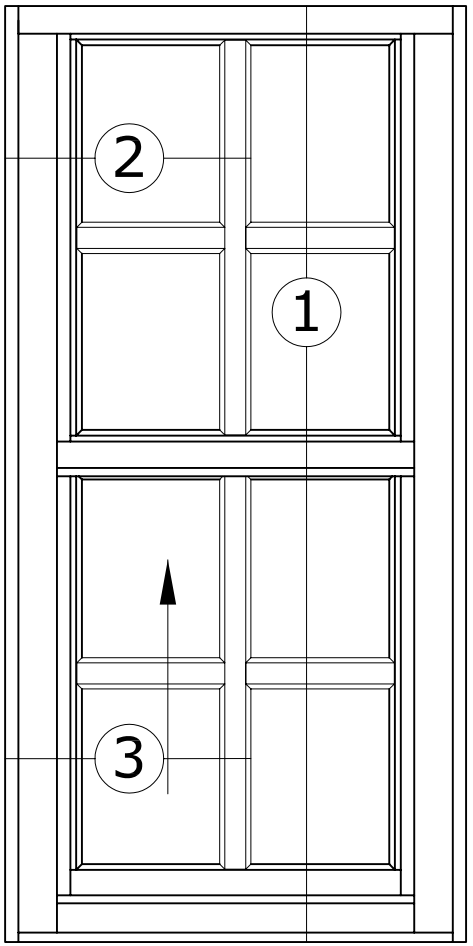

5500 DOUBLE HUNG

BLOCK & TACKLE
APPLIED GRIDS

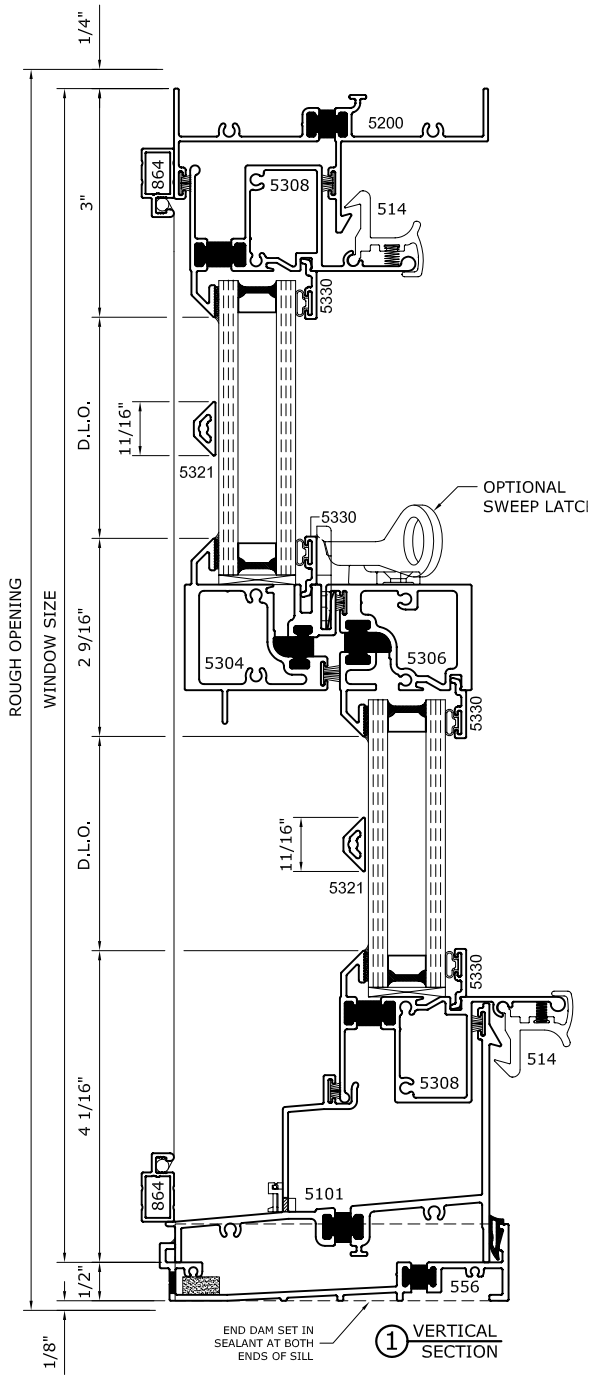

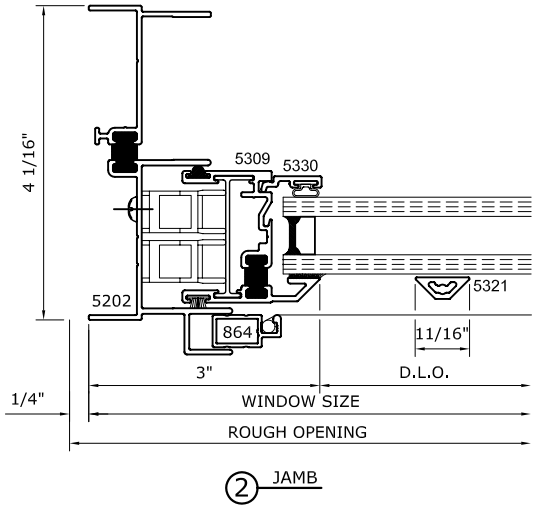

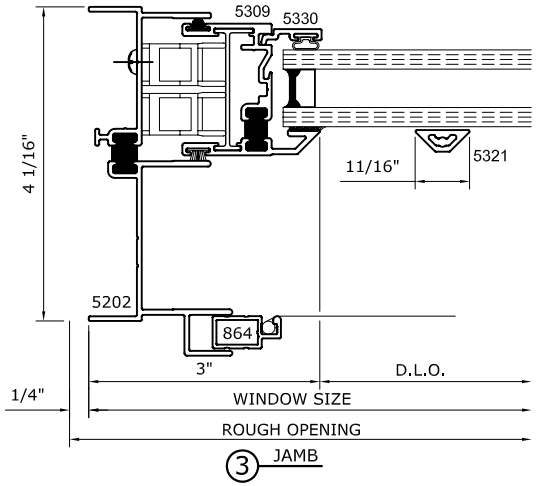

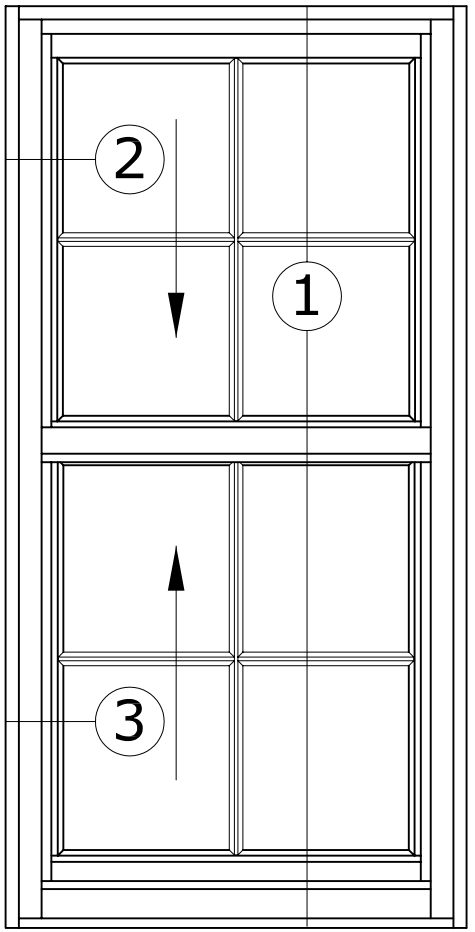

5500 DOUBLE HUNG

ULTRA LIFT
APPLIED GRIDS

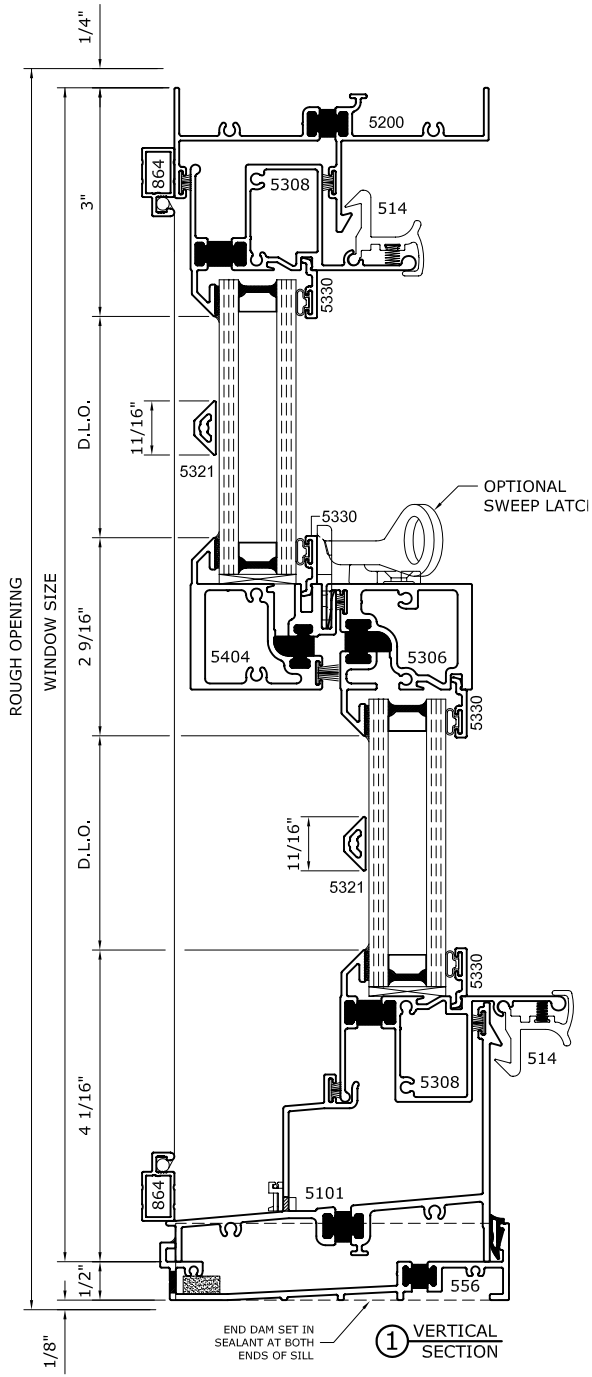

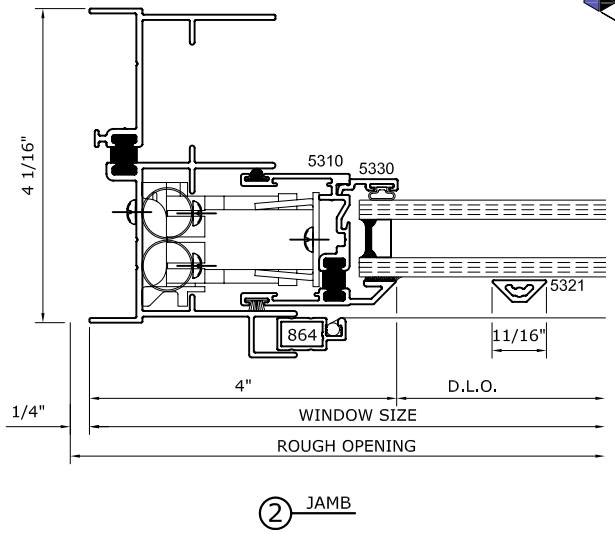

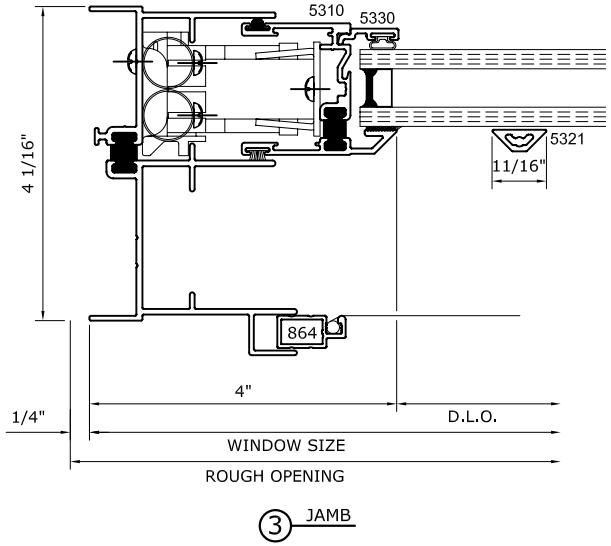

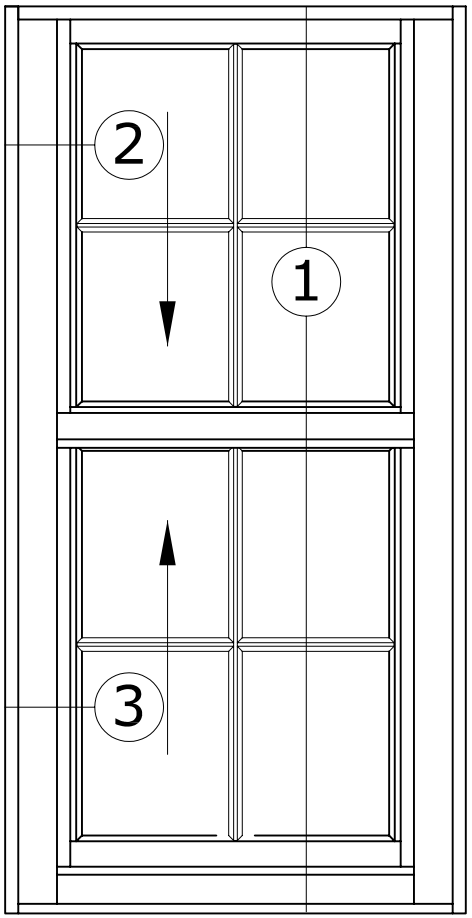

5500 DOUBLE HUNG

ULTRA LIFT
APPLIED GRIDS

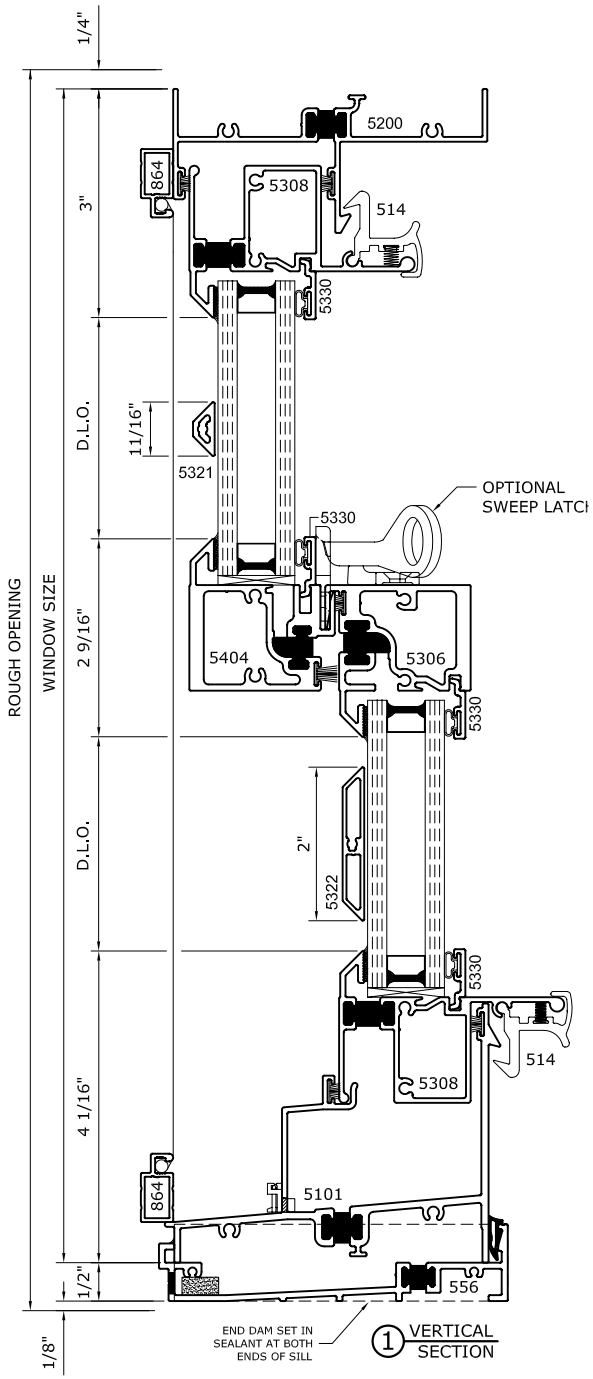

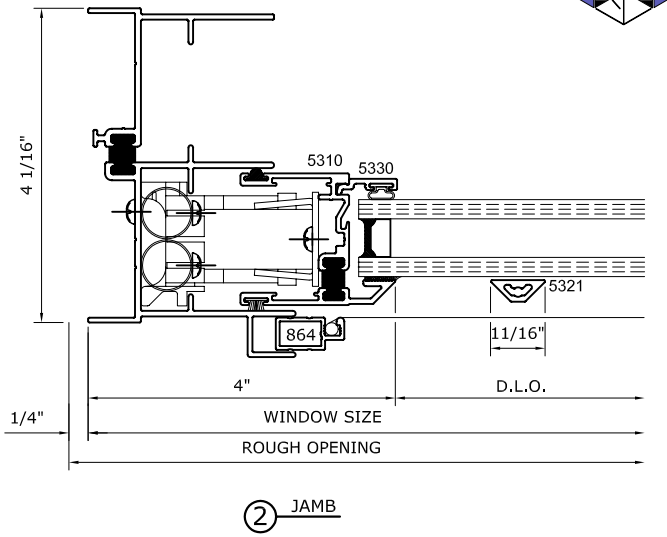

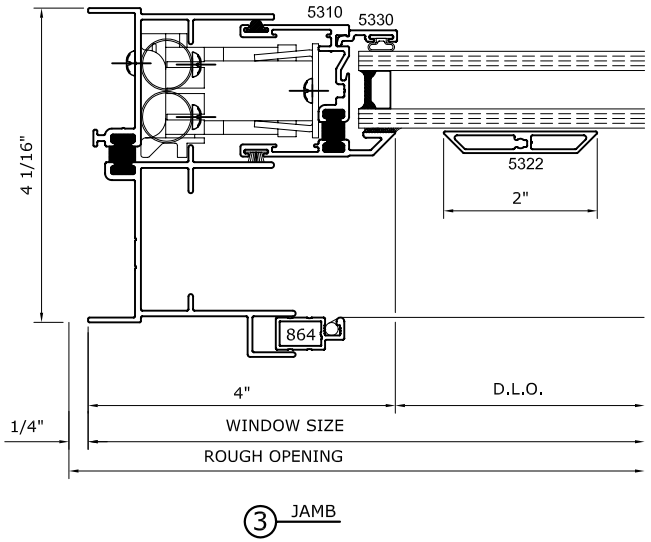

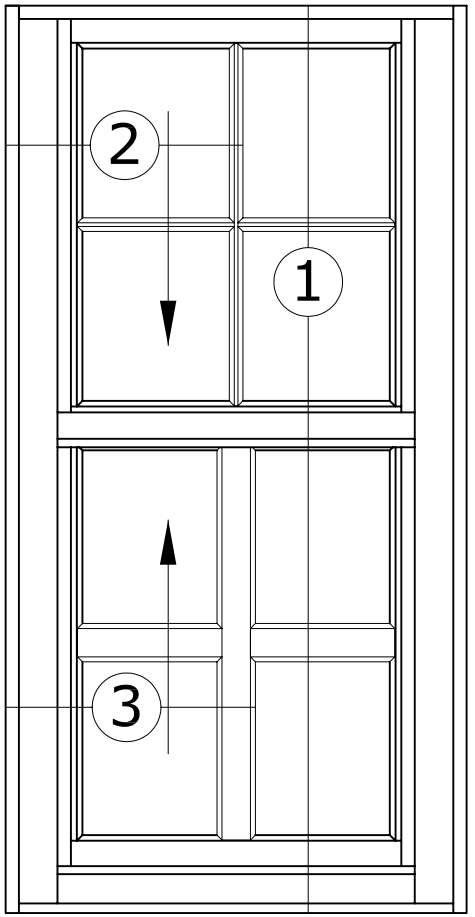

5500 SINGLE HUNG

T-MULLION

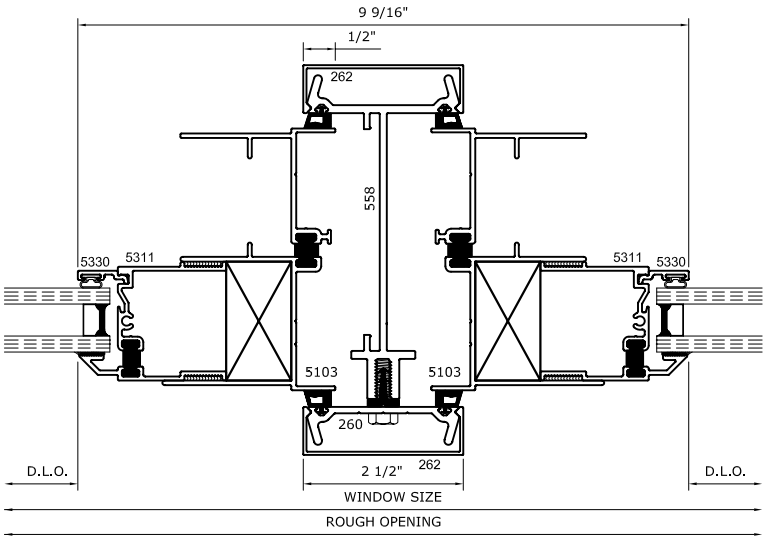

① T-MULLION

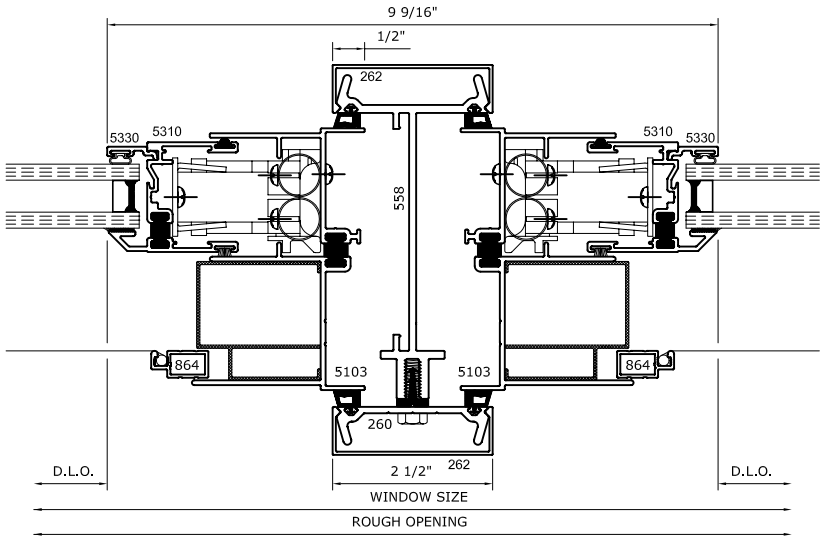

② T-MULLION

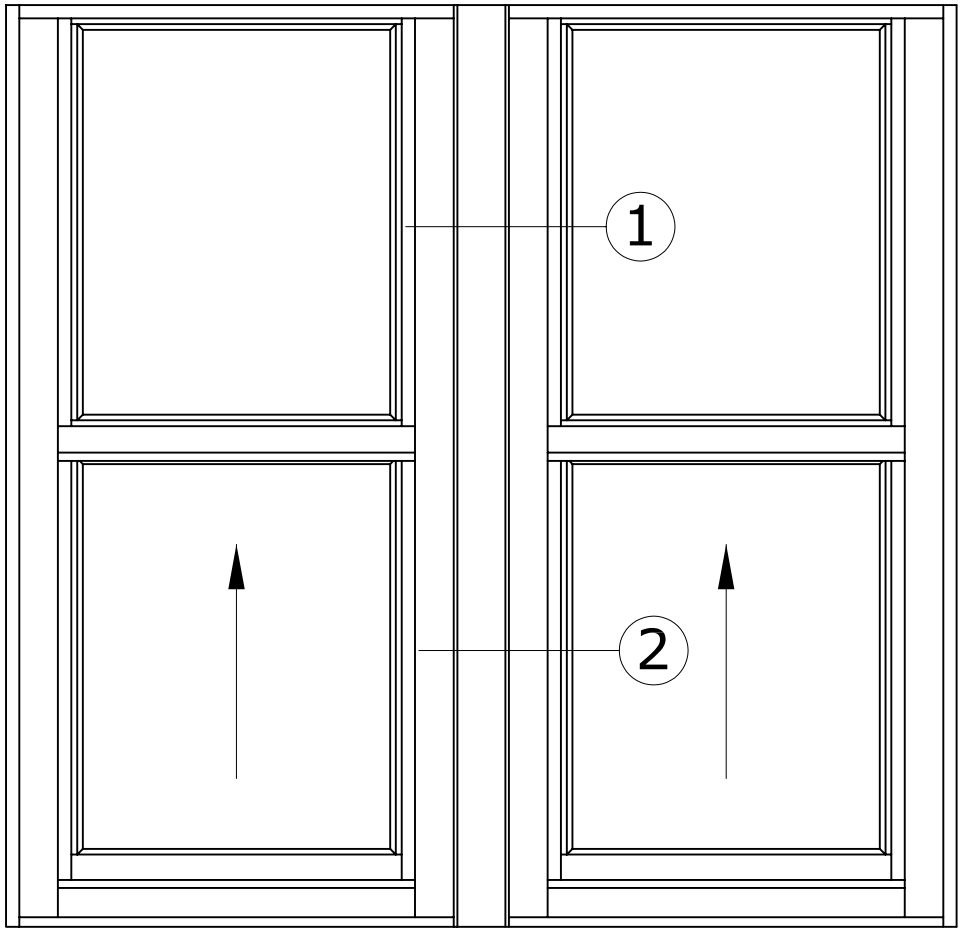

5500 SINGLE HUNG

W/ RECEPTOR

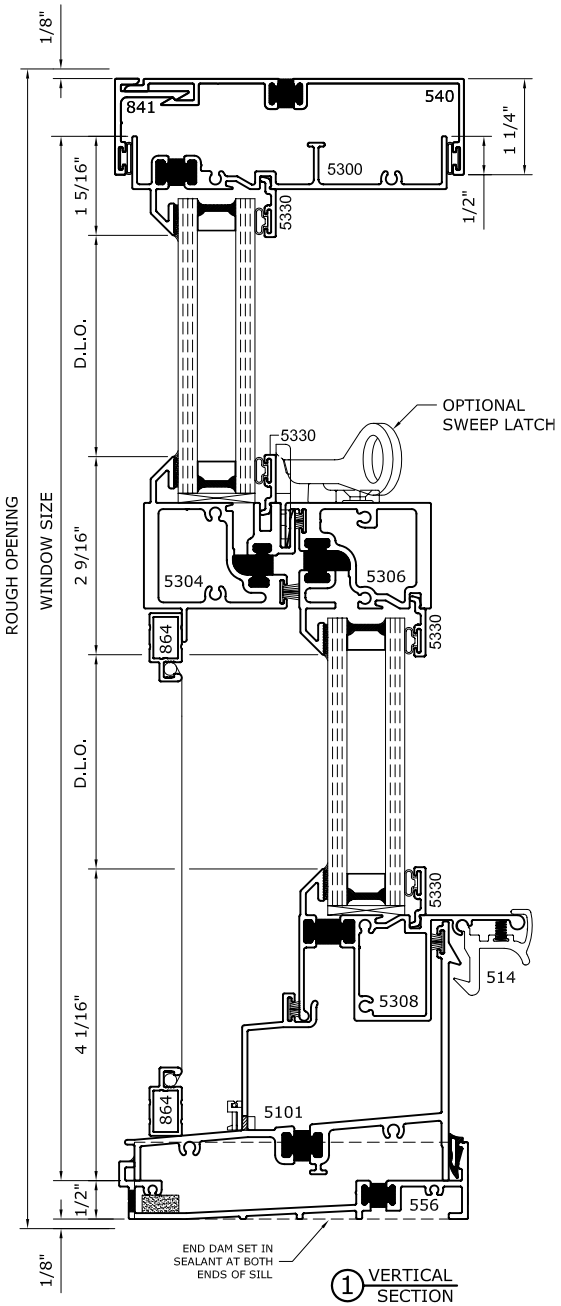

1 VERTICAL SECTION

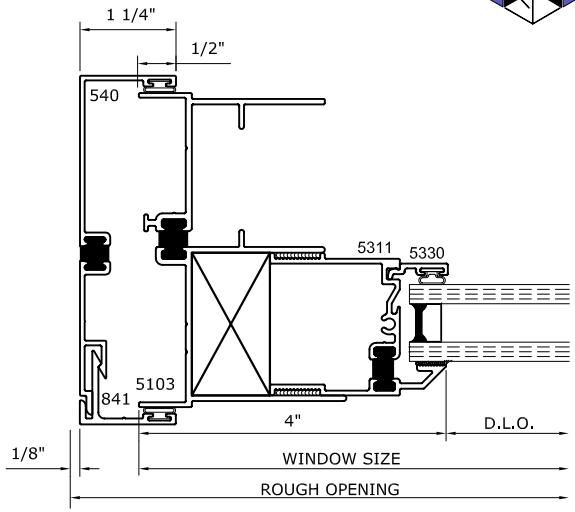

2 JAMB

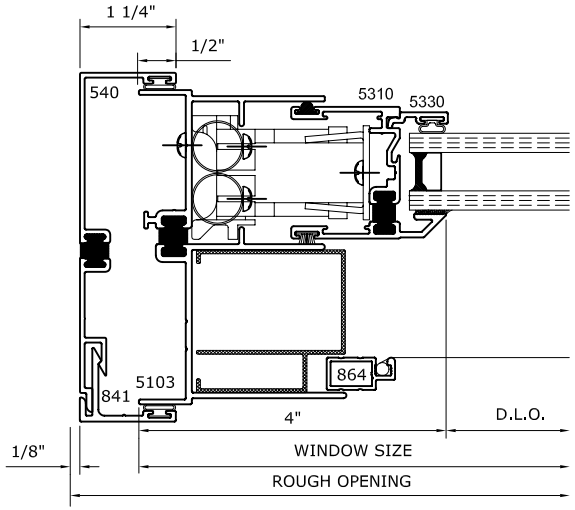

3 JAMB

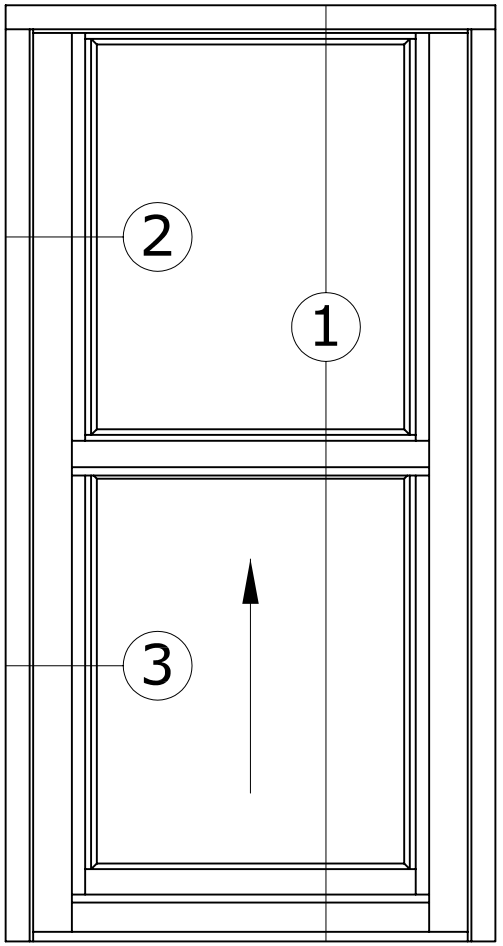

5500 SINGLE HUNG

W/PANNING

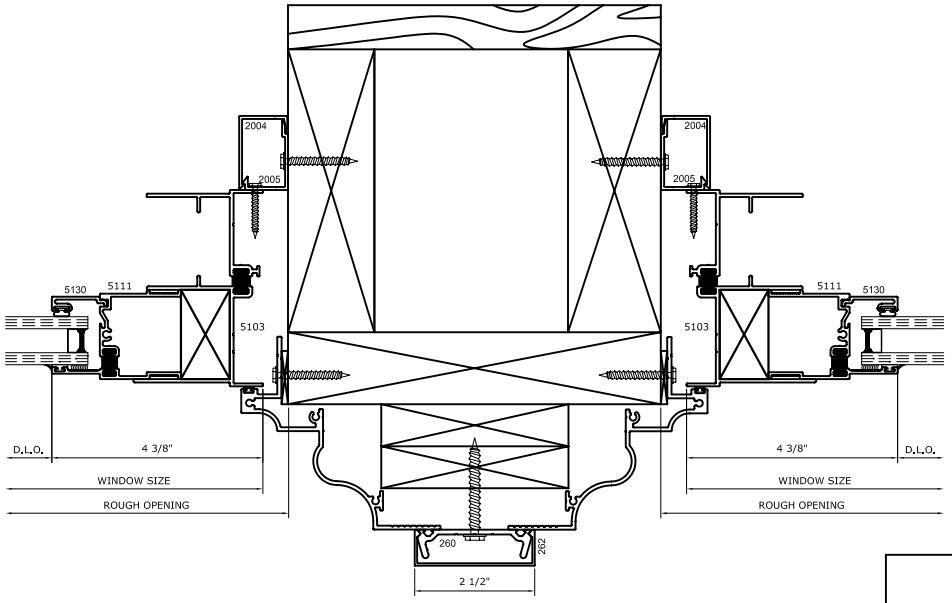

② HORIZONTAL SECTION

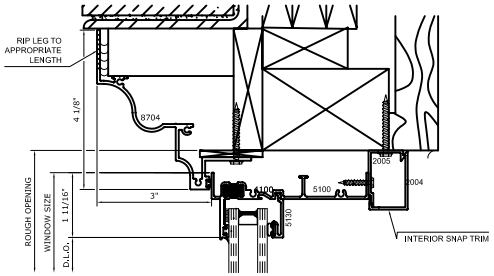

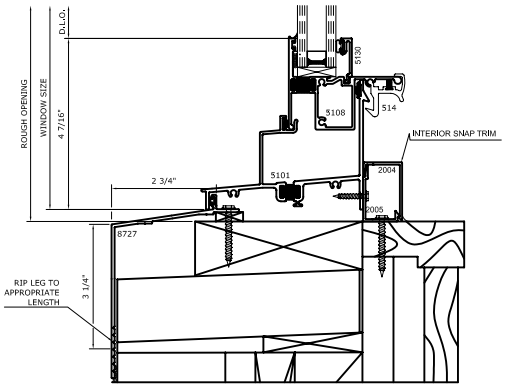

① VERTICAL SECTION

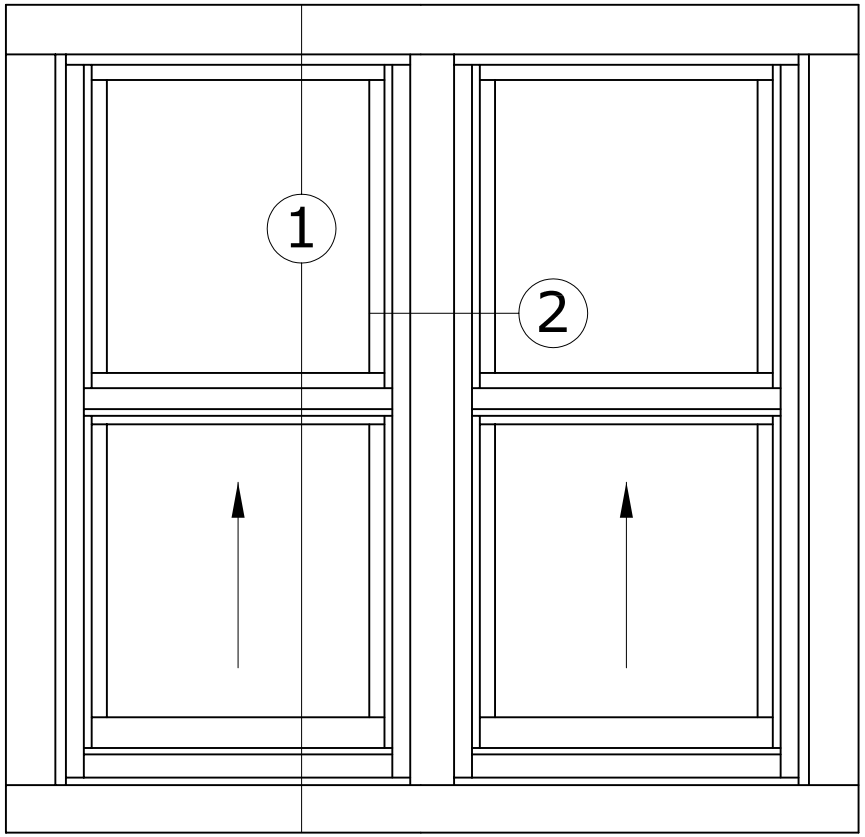

Windload Chart for 5500 UL #5103/509/5103 (T5 Temper)

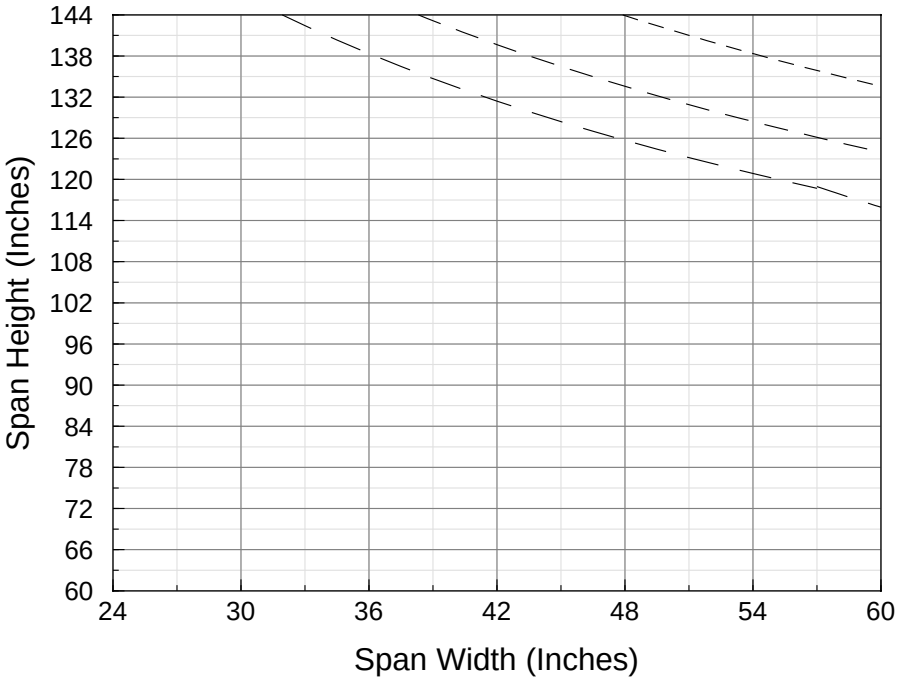

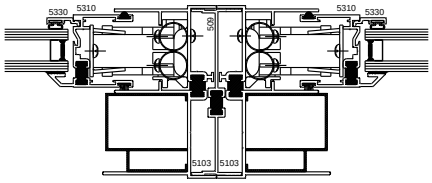

Windload Chart for 5500 B&T #5102/509/5102 (T5 Temper)

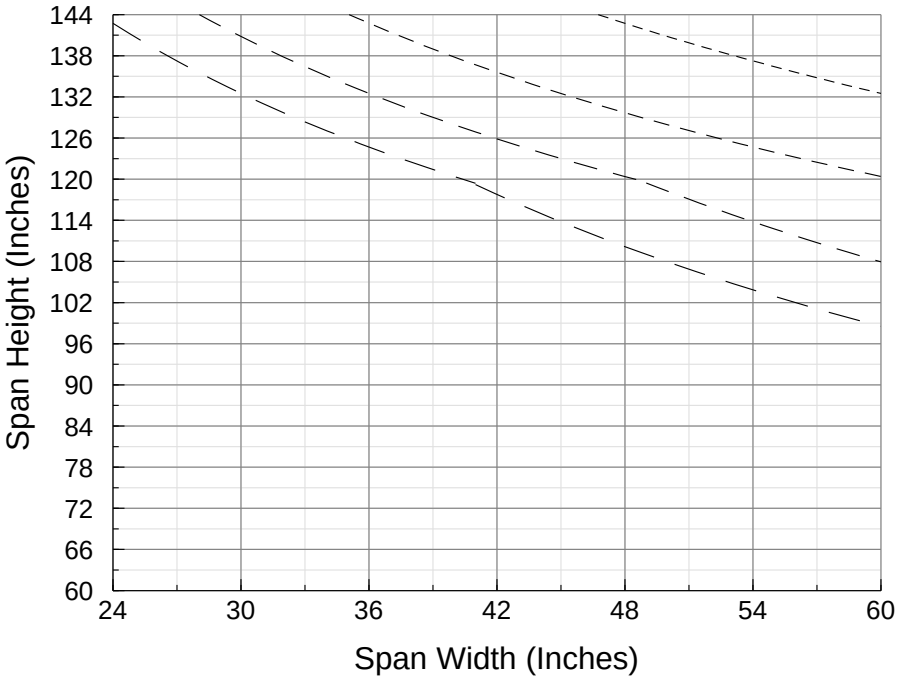

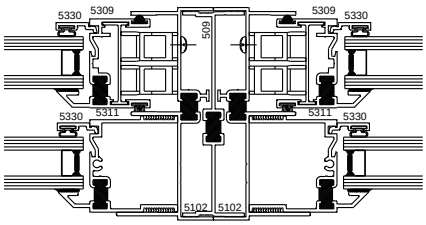

Deflections for both charts are based on L/175 for span heights below 13'6"

Windload Chart for 5500 UL #5103/568/5103 (T5 Temper)

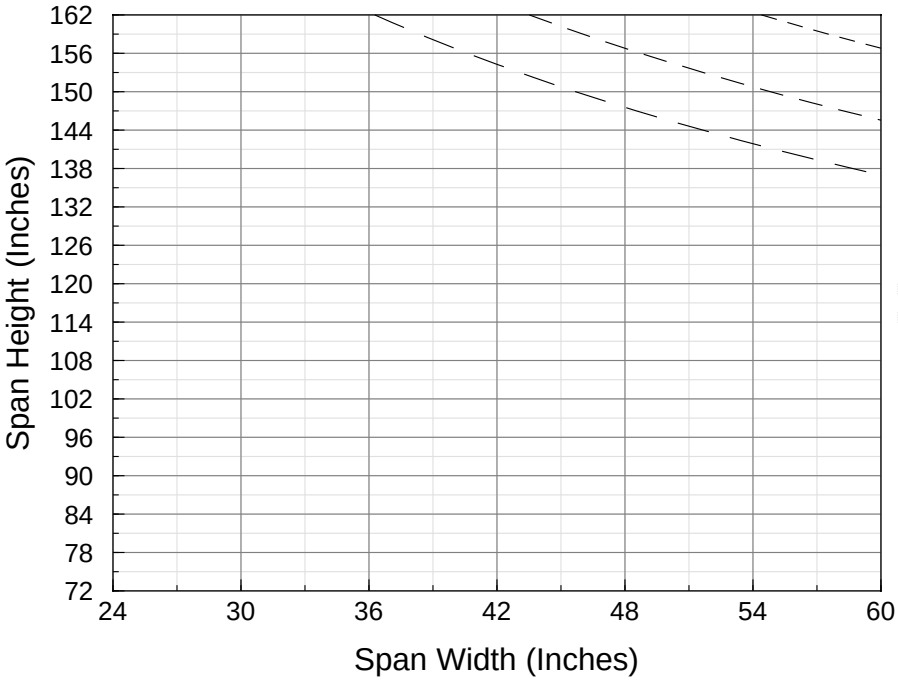

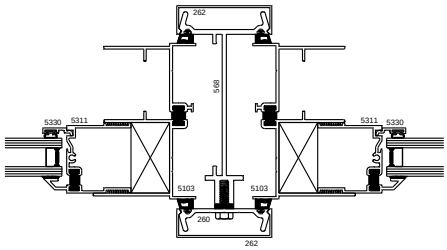

Windload Chart for 5500 B&T #5102/568/5102 (T5 Temper)

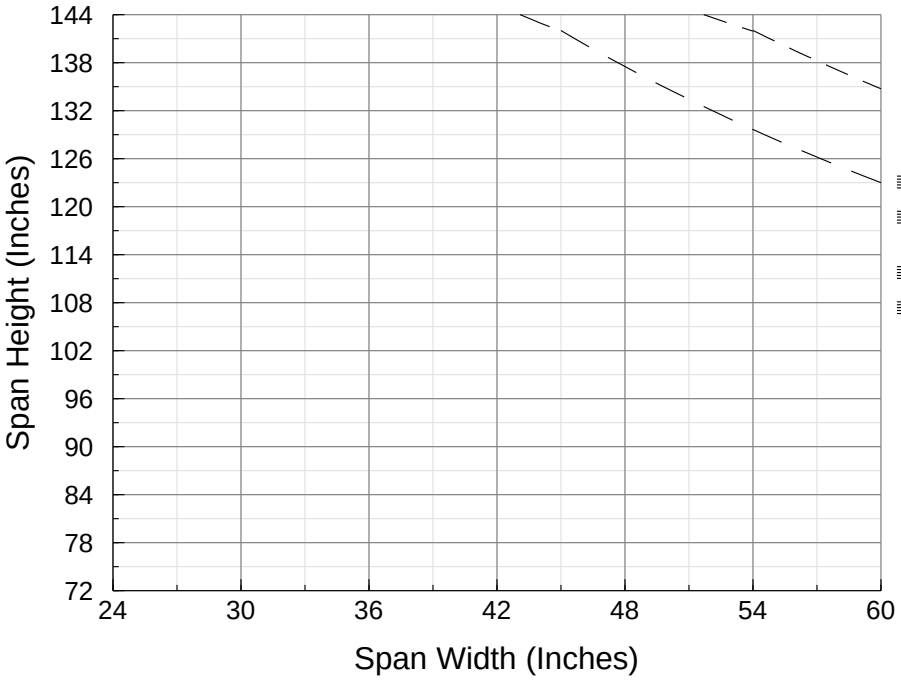

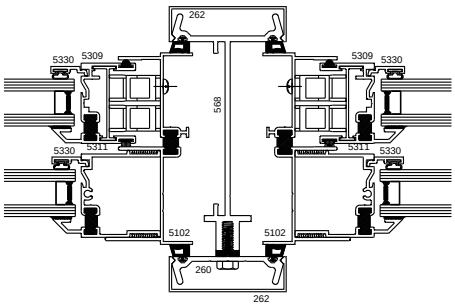

Deflections for both charts are based on L/175 for span heights below 13'6"

Windload Chart for 5500UL #5103/509/5300 (T5 Temper)

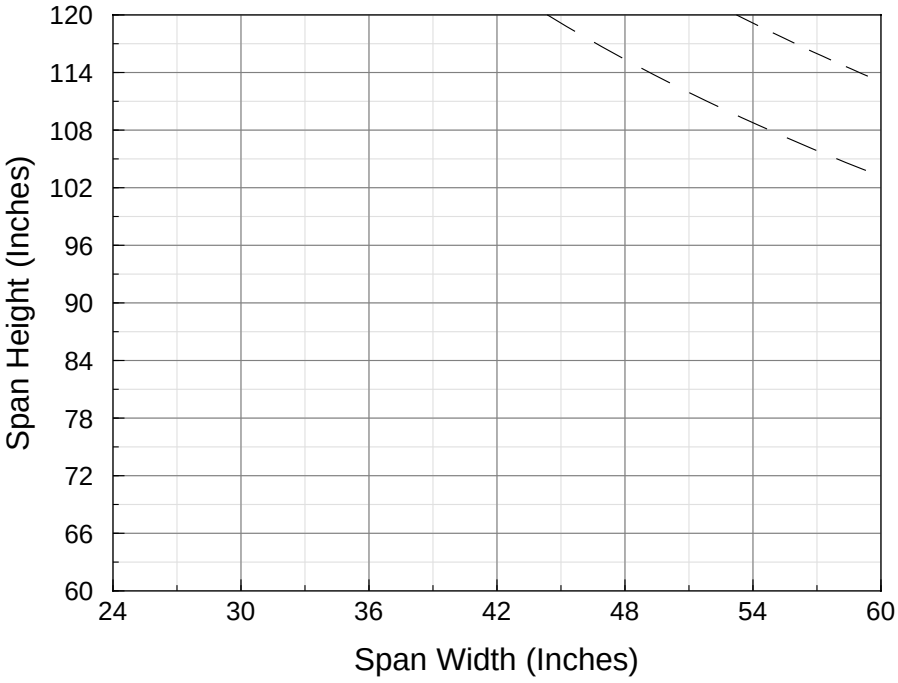

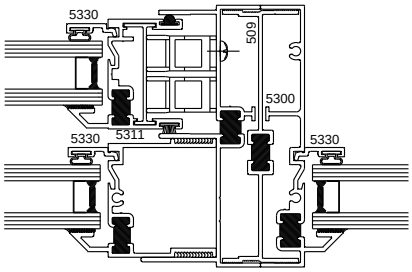

— — 25 PSF
— — 30 PSF

Windload Chart for 5500B&T #5102/509/5300 (T5 Temper)

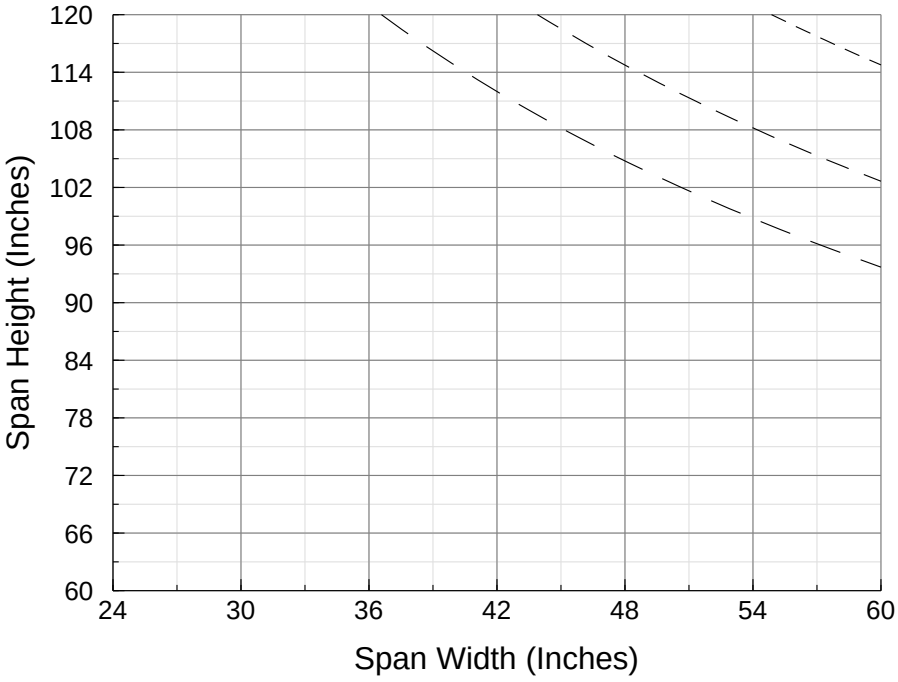

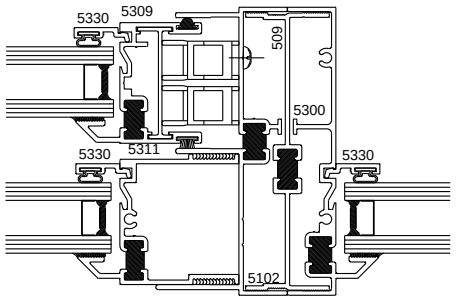

— — — 20 PSF
— — 25 PSF
— — 30 PSF

Deflections for both charts are based on L/175 for span heights below 13'6"