MANKO

4527i SERIES WINDOWS

STANDARD PROJECT OUT CONFIGURATIONS

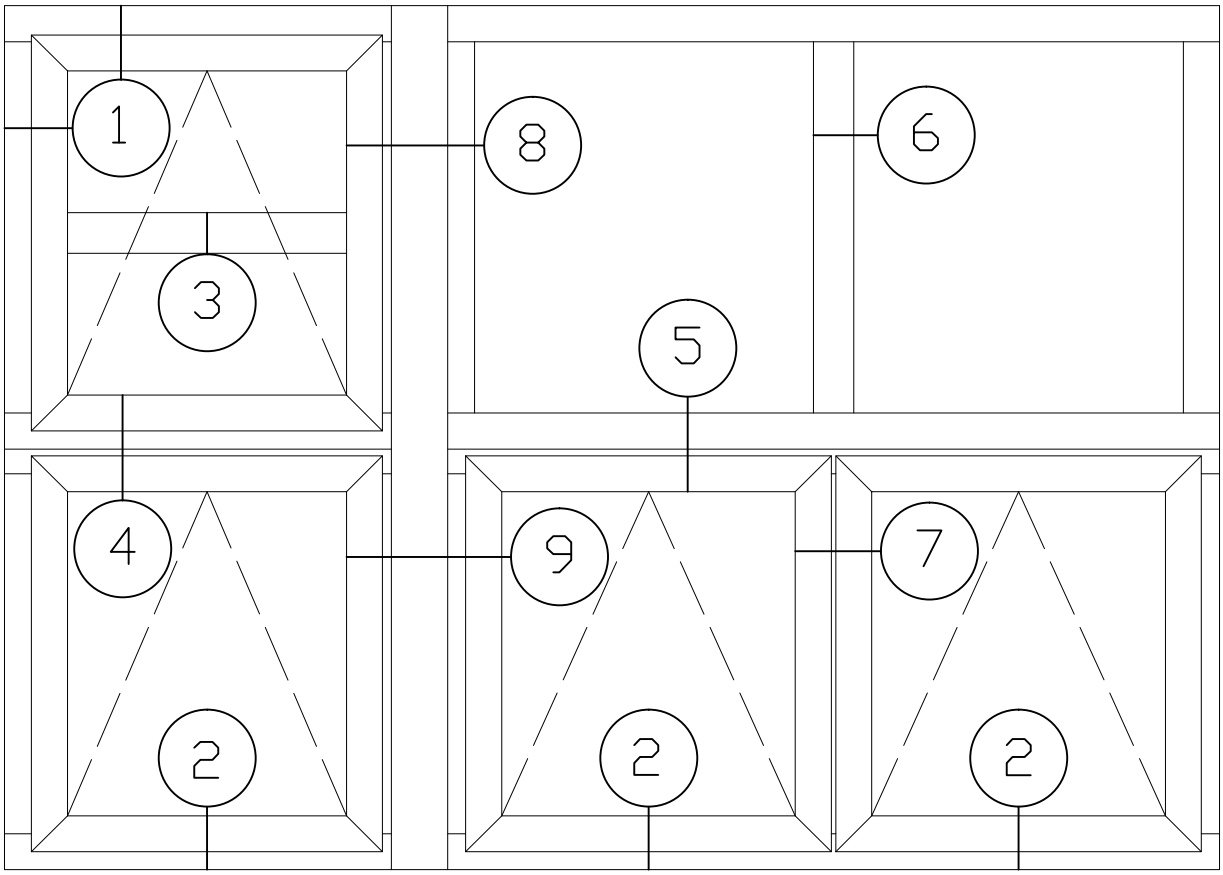

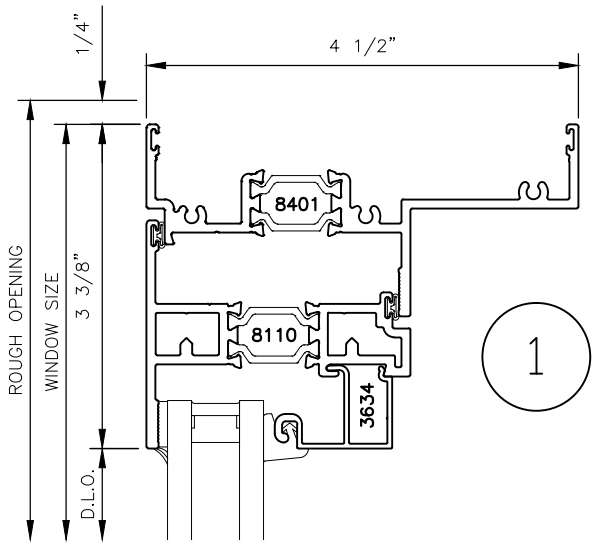

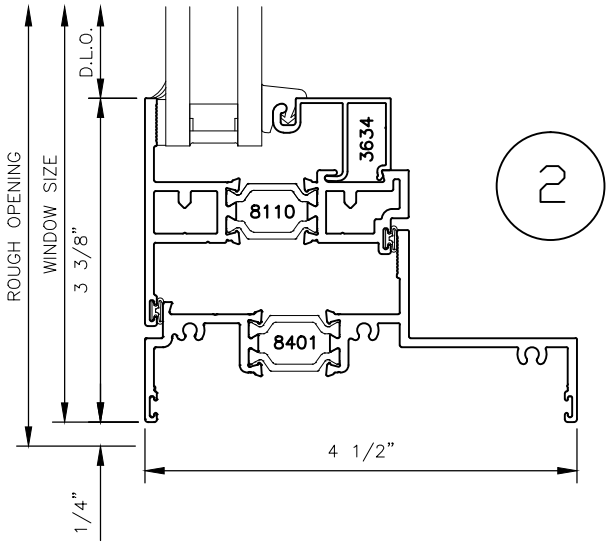

4527i SERIES WINDOWS

STANDARD PROJECT OUT CONFIGURATIONS

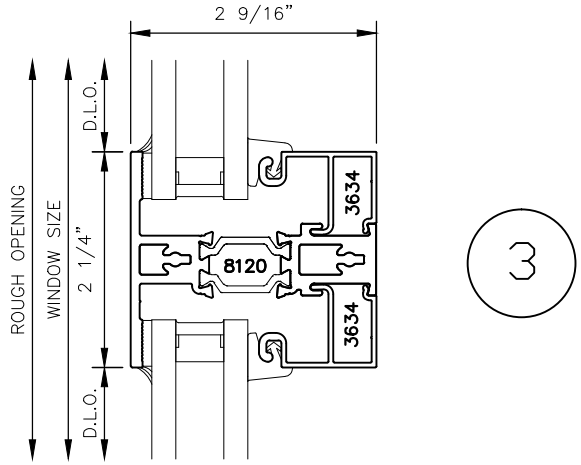

3

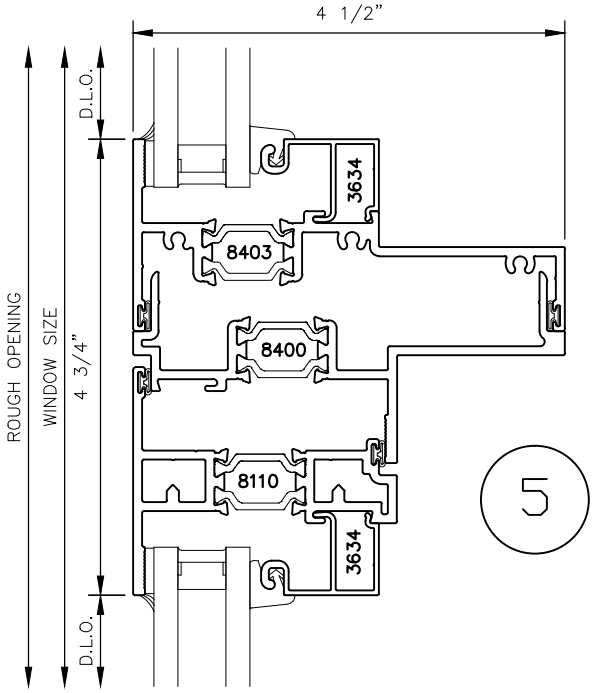

5

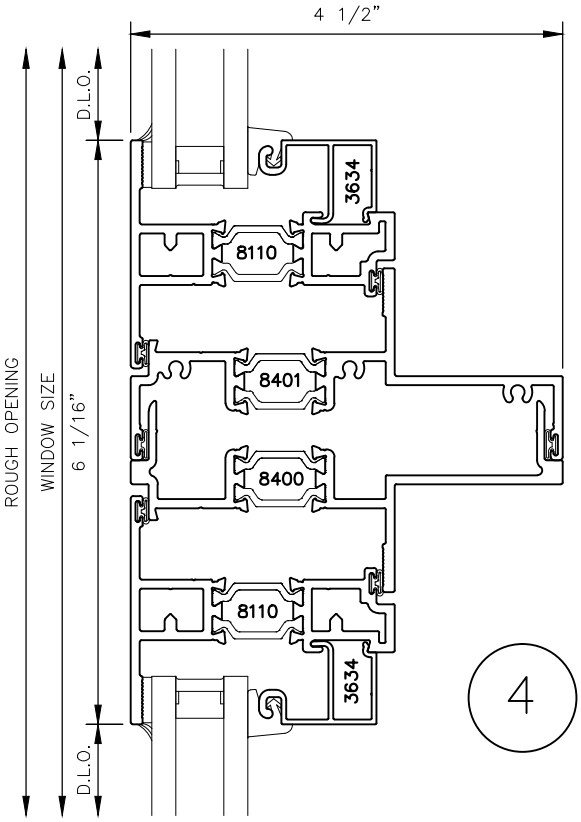

4

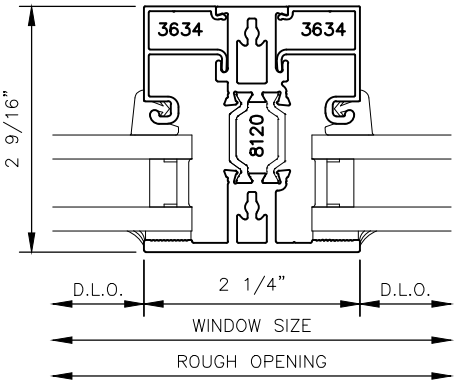

6

4527i SERIES WINDOWS

STANDARD PROJECT OUT CONFIGURATIONS

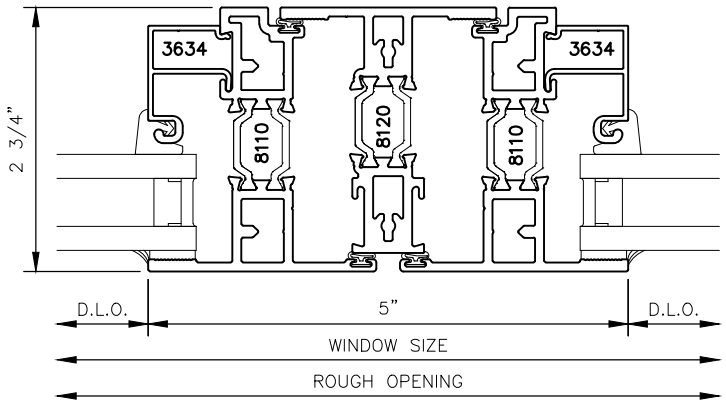

7

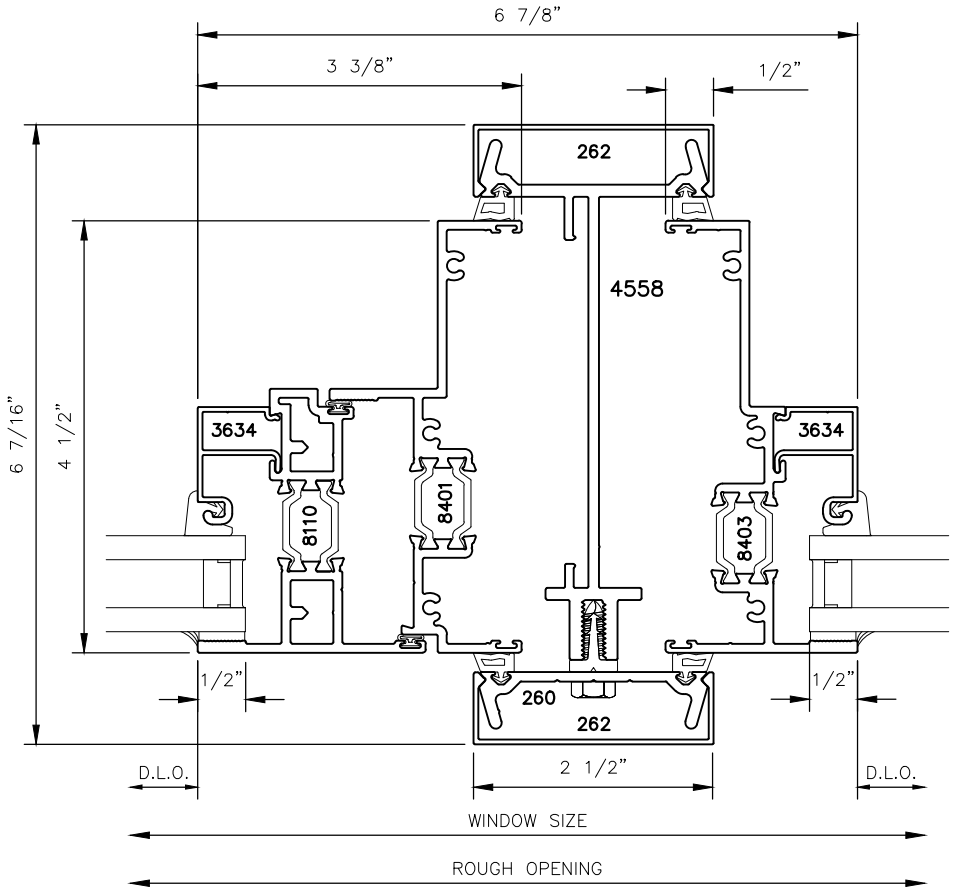

8

4527i SERIES WINDOWS

STANDARD PROJECT OUT CONFIGURATIONS

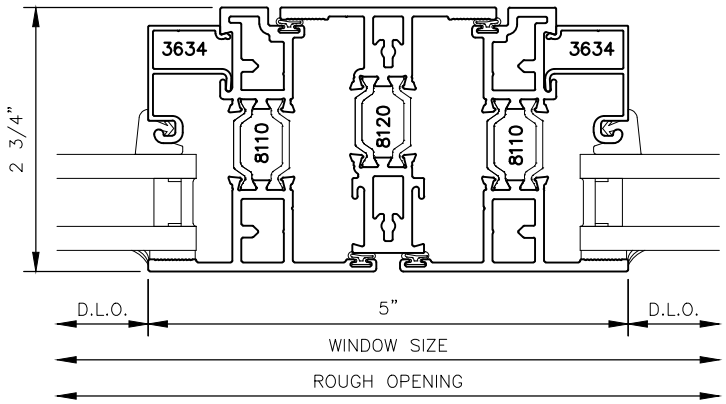

7

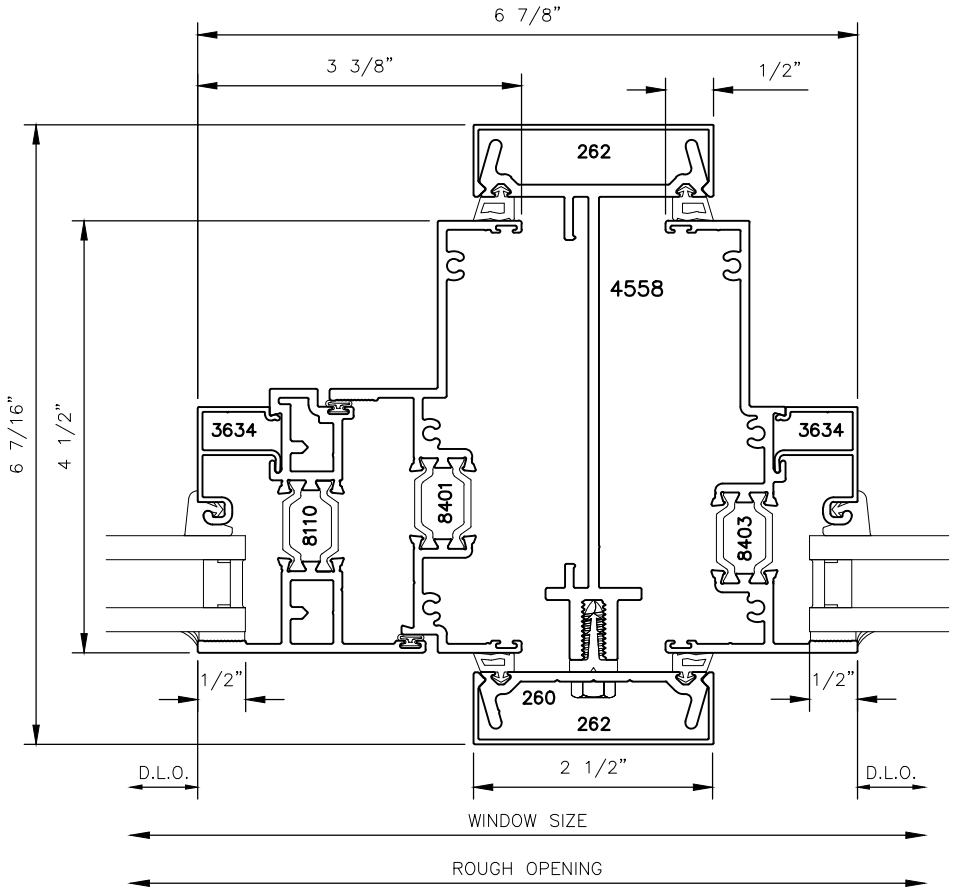

8